主要尺度
MAIN PARTICULARS

总长 LENGTH(o.a.)	117.60m
垂线间长 LENGTH(B.P.)	109.60m
型宽 BREADTH(MLD.)	19.00m
型深 DEPTH(MLD.)	10.00m
设计吃水 DESIGNED DRAFT	7.50m
载重量 DEAD WEIGHT	9000t
主机型号 MAINENGINE TYPE	MAK 9M25
额定功率 RATED OUTPUT	2970kw
额定转速 RATED SPEED	750rpm

服务航速 SERVICE SPEED	13.00Kn
续航力 ENDURANCE	6000 sea miles
船员 COMPLEMENT	20P
航区 NAVIGATION AREA	无限航区 UNRESTRICTED NAVIGATION
梁拱 CAMBER	UPPER DECK CARGO TANK AREA CAMBER 0.45m FORECASTLE DECK CAMBER 0.30m COMPASS DECK CAMBER 0.15m
船级符号 CLASS NOTATION	I ■HULL ■ MACH, PRODUCT OIL TANKER/CHEMICAL TANKER IMO TYPE 2 ESP UNRESTRICTED NAVIGATION
肋距 F.S	STERN~#9, #144~HEAD 600mm #9~#144 700mm

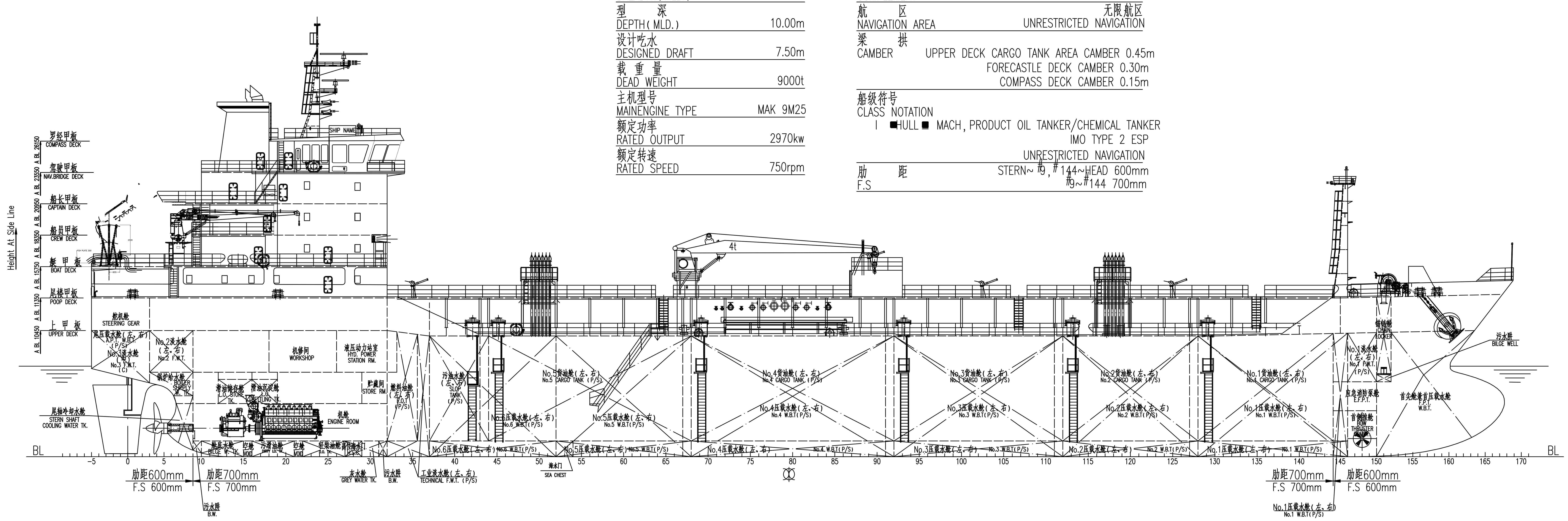

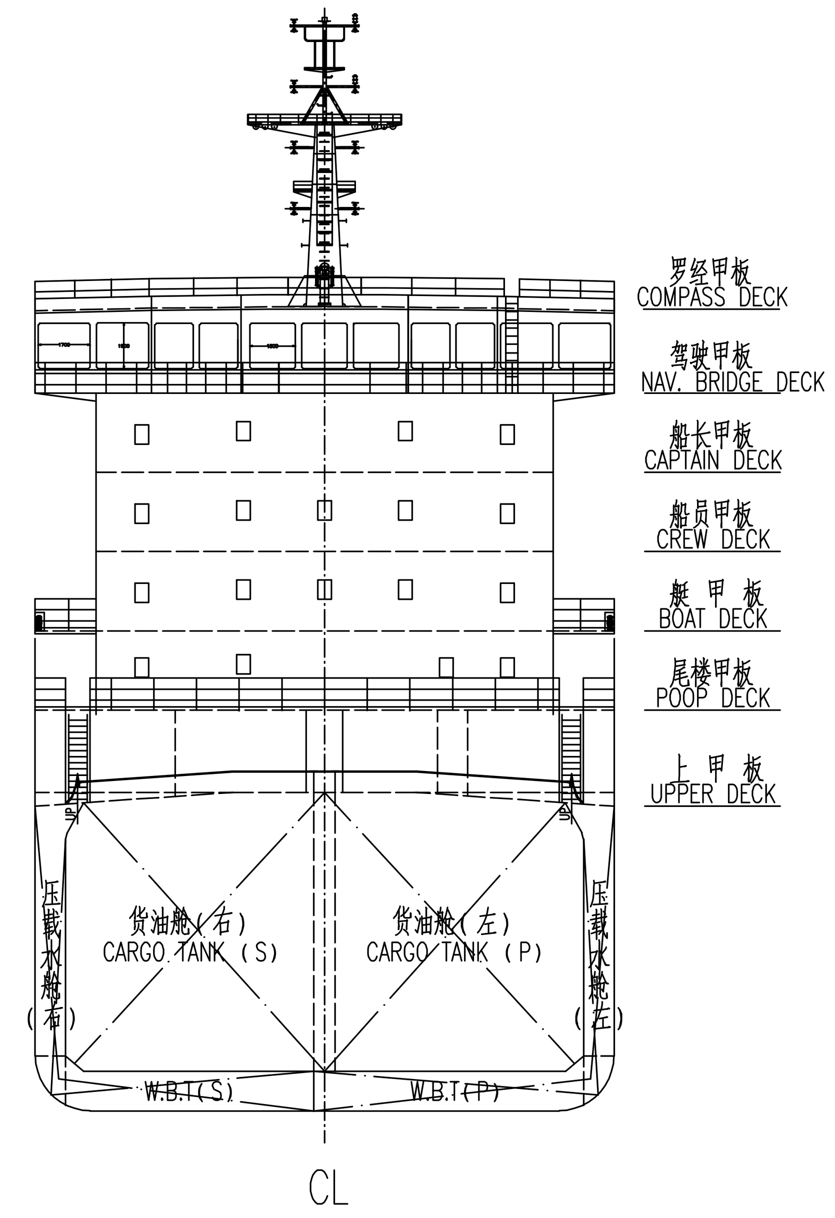

艇甲板
BOAT DECK

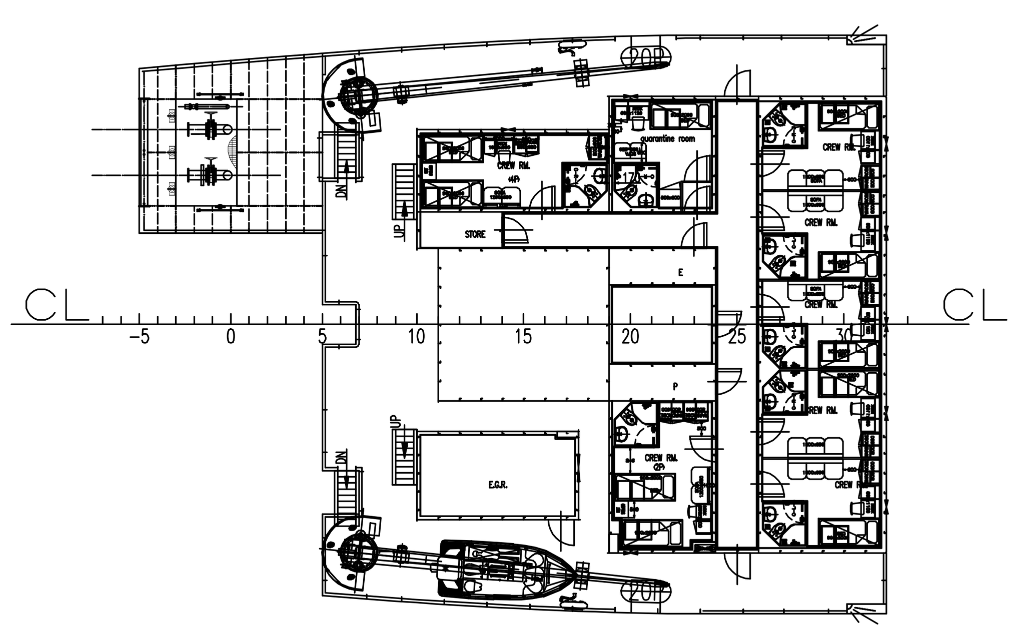

船员甲板
CREW DECK

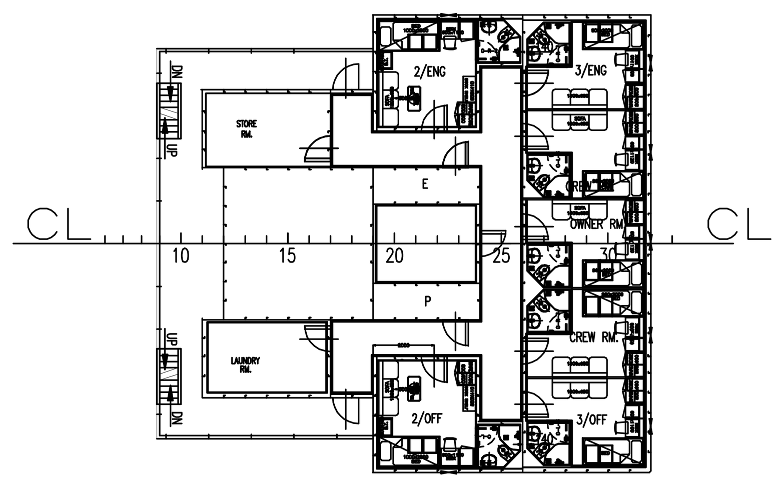

船长甲板
CAPTAIN DECK

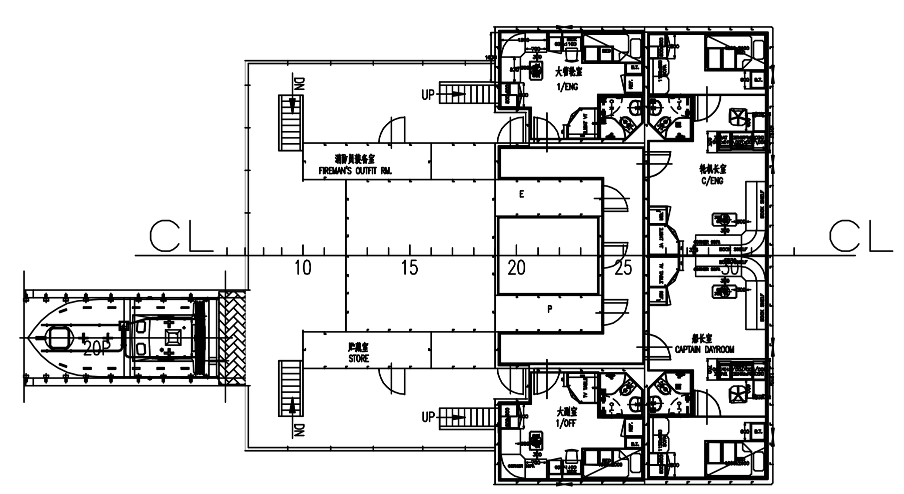

驾驶甲板
NAV. BRIDGE DECK

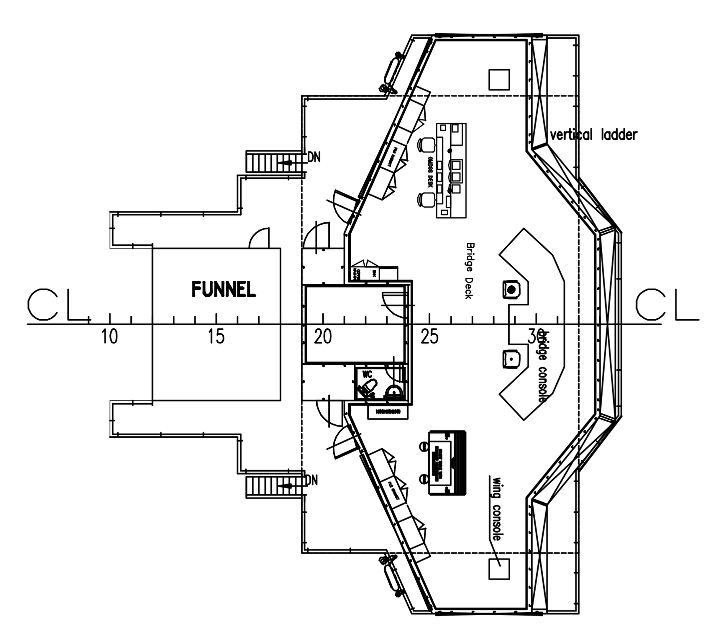

罗经甲板
COMPASS DECK

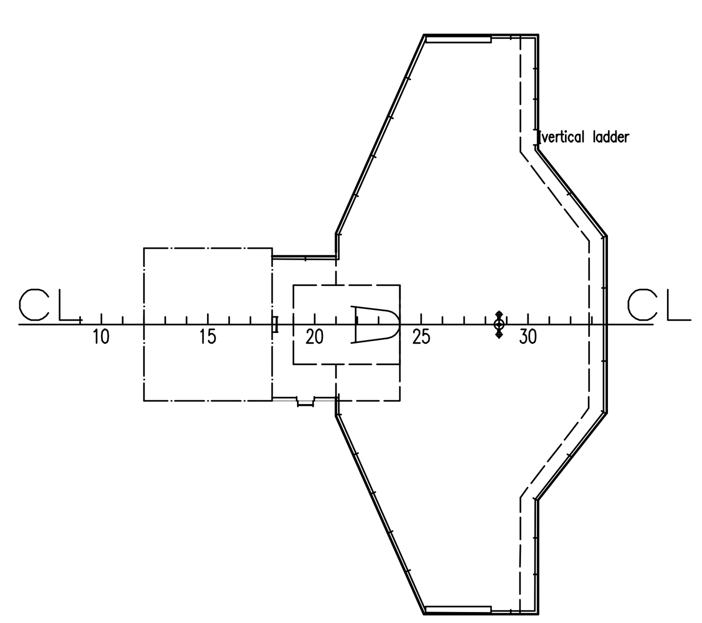

尾楼甲板
POOP DECK

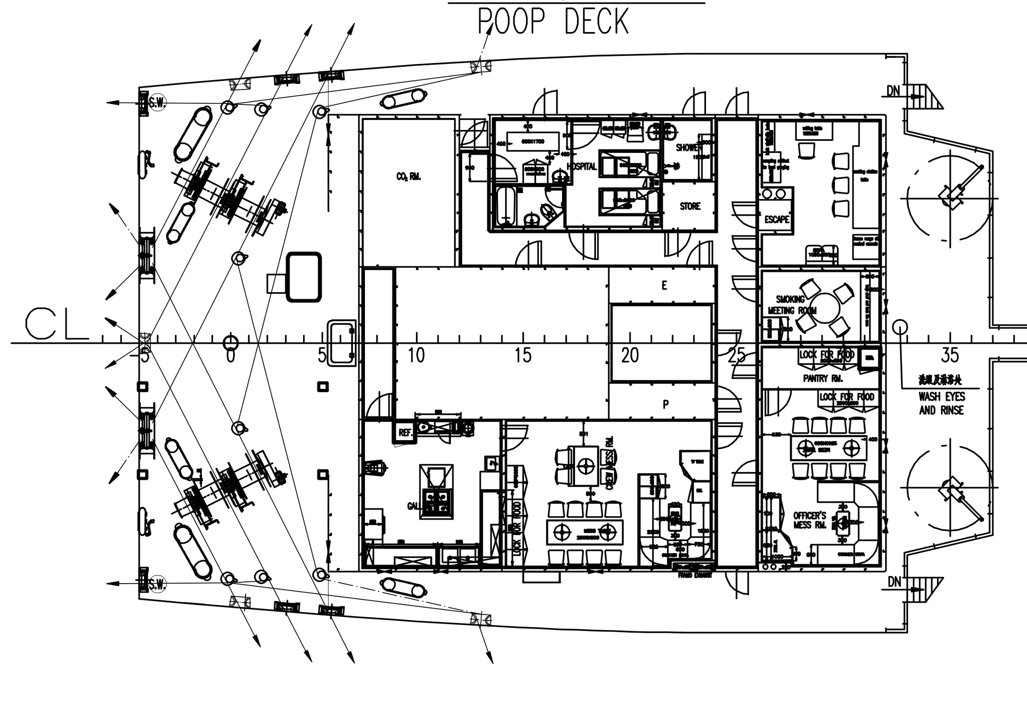

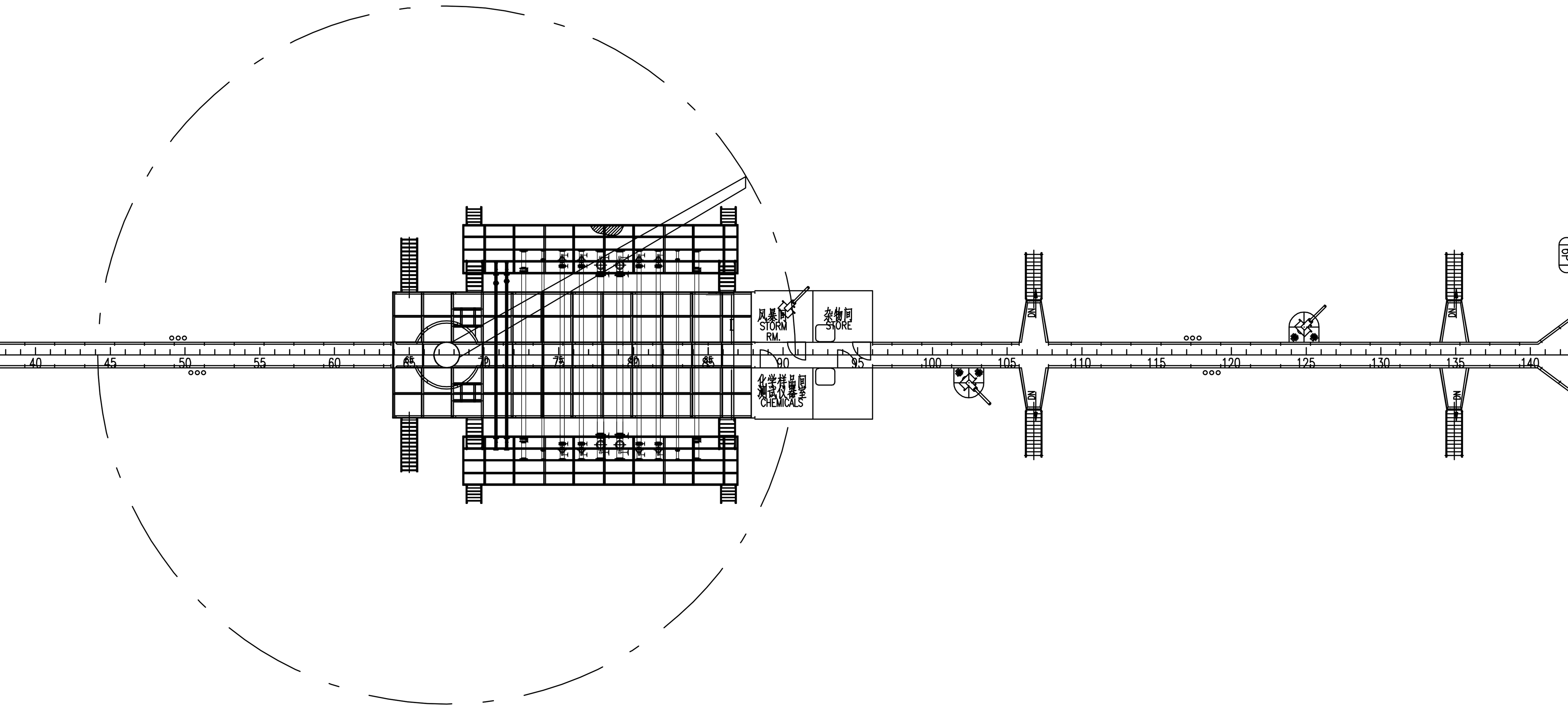

首楼甲板
FORECASTLE DECK

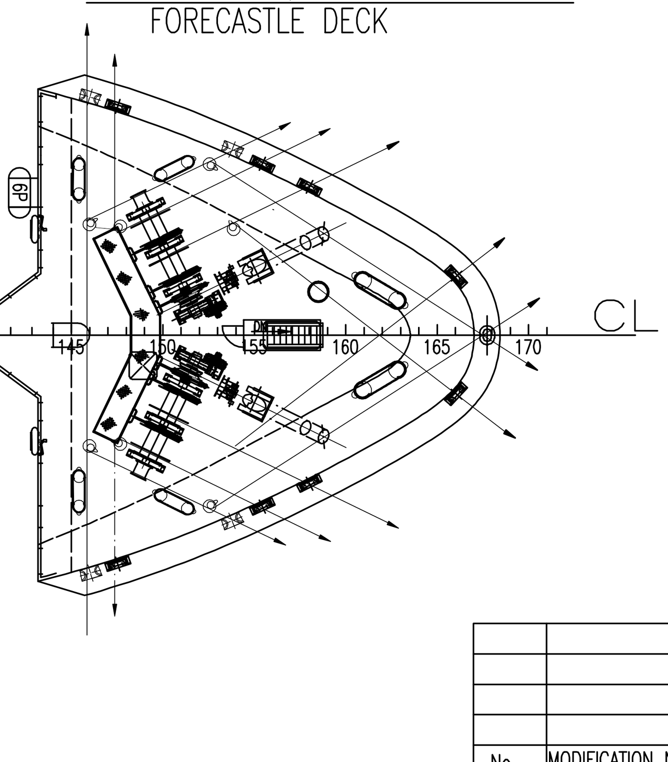

会签CONUTERSIGN						
DATE						
No.	MODIFICATION No.	SIGNED	DATE	9000DWT PRODUCT OIL/CHEMICAL TANKER	PRODUCTION DESIGN	REVISION 0
设绘				总布置图	DRAWING No.	
校对				General Arrangement	PROJECT No.	
标检					TOTAL 2 / PAGE 1	WEIGHT
审核					SCALE 1:200	
审定		DATE				