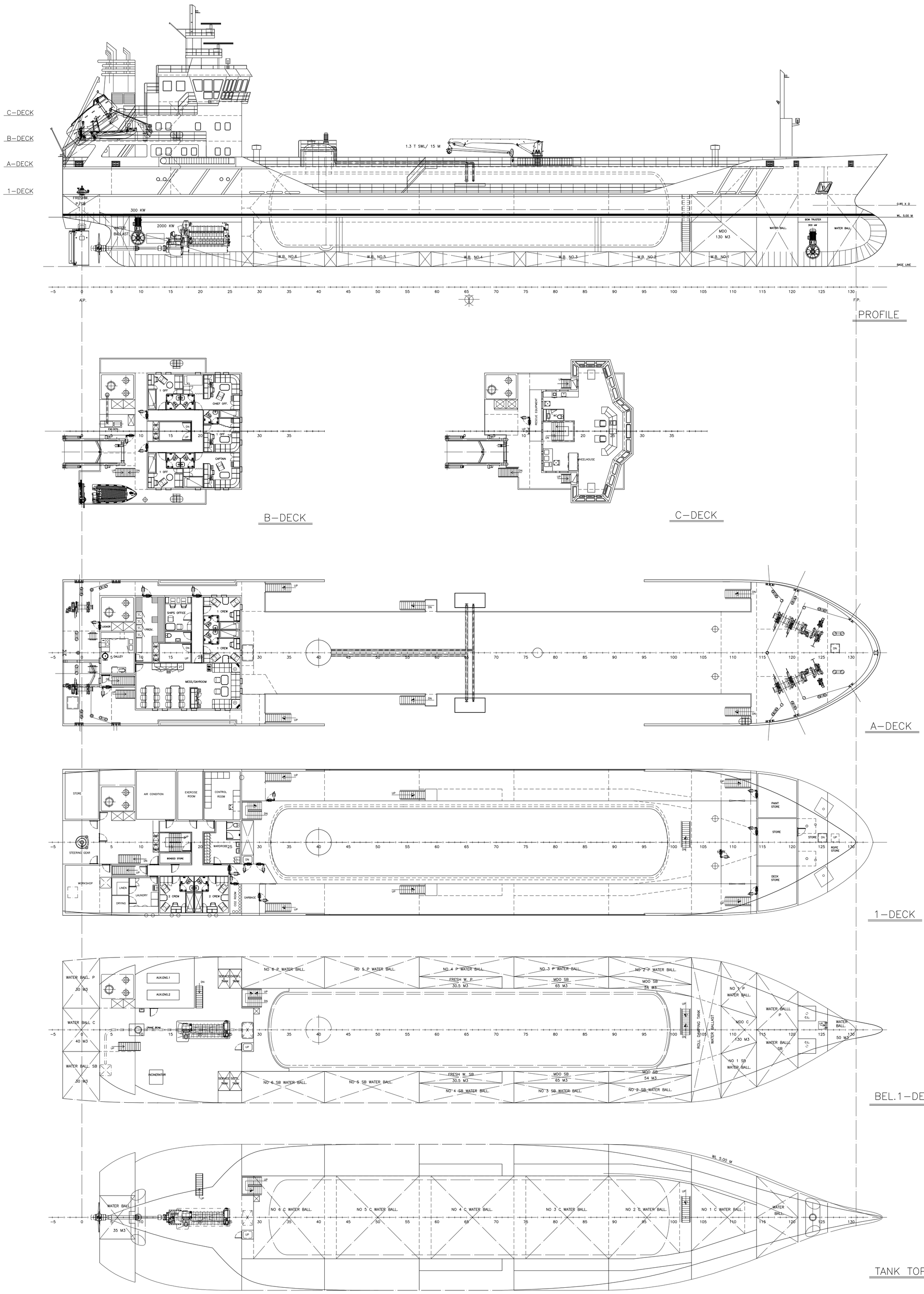

PK-616

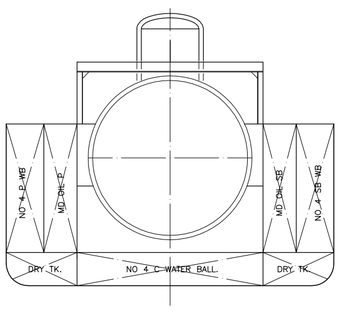

MAIN DIMENSIONS:

LENGTH O. A.	=	83.60 M
LENGTH BETW. PERP.	=	78.49 M
LENGTH LOAD LINE/SOLAS	=	78.49 M
BREADTH MLD.	=	14.80 M
BREADTH MAX.	=	15.10 M
DEPTH MLD. 1.DECK	=	7.30 M
DRAUGHT LOADED, MAX	=	5.00 M

CAPACITIES (APP.):

CARGO TANK	=	1500 M^3
MARINE DIESEL OIL	=	388 M^3
FRESH WATER	=	59 M^3
WATER BALLAST	=	2520 M^3
DEADWEIGHT	=	2000 T

REV.	DESCRIPTION	DATE	SIGN.
B	Tender version. Owners Approval, deck crane	19.01.09	THV
A1	TANK ARRANGEMENT	18.12.08	THV
A	INTERNAL CONTROL	21.11.08	THV

Referring to convention of Paris 20. march 1883, for the "Protection of Industrial Property", we emphasis that technical drawings, descriptions, models, specifications etc. belong to the designing firm, and cannot be made public, copied or otherwise used without the written consent of our firm.

CLIENT:

CLIENT DRAW.NO.:

TITLE: 1500 M3 TANKER FOR CO2 GENERAL ARRANGEMENT

SCALE: 1:200

DRAW.: 17.10.08 THV

CONTR.:

APPROVED:

polarkonsult
naval architects & marine engineers
P.O.BOX 877, N-9488 HARSTAD, NORWAY

PK–PROJECT NO.: 8130

SHEETS: 1/1

PK DRAW.NO.: 156781

REV.: B

CADFILE: 156781B.DWG