RULES AND REGULATIONS FOR THE CLASSIFICATION OF SHIPS

SHIP STRUCTURES (SHIP TYPES)

JULY 2007

PART 4

Lloyd's Register

Lloyd's Register is an exempt charity under the UK Charities Act 1993

Lloyd's Register, its affiliates and subsidiaries and their respective officers, employees or agents are, individually and collectively, referred to in this clause as the 'Lloyd's Register Group'. The Lloyd's Register Group assumes no responsibility and shall not be liable to any person for any loss, damage or expense caused by reliance on the information or advice in this document or howsoever provided, unless that person has signed a contract with the relevant Lloyd's Register Group entity for the provision of this information or advice and in that case any responsibility or liability is exclusively on the terms and conditions set out in that contract.

Chapter Contents

Part 4

PART	1	REGULATIONS		
PART	2	RULES FOR THE MANUFACTURE, TESTING AND CERTIFICATION OF MATERIALS		
PART	3	SHIP STRUCTURES (GENERAL)		
PART	**4**	**SHIP STRUCTURES (SHIP TYPES)**		
		Chapter	**1**	**General Cargo Ships**
			2	**Ferries, Roll on-Roll off Ships and Passenger Ships**
			3	**Tugs**
			4	**Offshore Supply Ships**
			5	**Barges and Pontoons**
			6	**Trawlers and Fishing Vessels**
			7	**Bulk Carriers**
			8	**Container Ships**
			9	**Double Hull Oil Tankers**
			10	**Single Hull Oil Tankers**
			11	**Ore Carriers**
			12	**Dredging and Reclamation Craft**
PART	5	MAIN AND AUXILIARY MACHINERY		
PART	6	CONTROL, ELECTRICAL, REFRIGERATION AND FIRE		
PART	7	OTHER SHIP TYPES AND SYSTEMS		

© Lloyd's Register, 2007. All rights reserved.

Except as permitted under current legislation no part of this work may be photocopied, stored in a retrieval system, published, performed in public, adapted, broadcast, transmitted, recorded or reproduced in any form or by any means, without the prior permission of the copyright owner. Enquiries should be addressed to Lloyd's Register, 71 Fenchurch Street, London, EC3M 4BS.

Contents

Part 4

CHAPTER 1 GENERAL CARGO SHIPS

Section 1 General
1.1 Application
1.2 Structural configuration
1.3 Class notations
1.4 Information required
1.5 Symbols and definitions

Section 2 Materials and protection
2.1 Materials and grades of steel
2.2 Protection of steelwork

Section 3 Longitudinal strength
3.1 General
3.2 Fast cargo ships

Section 4 Deck structure
4.1 General
4.2 Deck plating
4.3 Deck stiffening
4.4 Deck supporting structure
4.5 Deck openings

Section 5 Shell envelope plating
5.1 General
5.2 Keel
5.3 Bottom shell and bilge
5.4 Side shell

Section 6 Shell envelope framing
6.1 General
6.2 Longitudinal stiffening
6.3 Transverse stiffening
6.4 Primary supporting structure

Section 7 Single bottom structure
7.1 General
7.2 Girders and floors

Section 8 Double bottom structure
8.1 Symbols and definitions
8.2 General
8.3 Girders
8.4 Inner bottom plating and stiffening
8.5 Floors

Section 9 Bulkheads
9.1 General
9.2 Watertight and deep tank bulkheads
9.3 Shaft tunnels
9.4 Non-watertight bulkheads

CHAPTER 2 FERRIES, ROLL ON-ROLL OFF SHIPS AND PASSENGER SHIPS

Section 1 General
1.1 Application
1.2 Structural configuration
1.3 Class notations
1.4 Information required
1.5 Symbols

Contents

Section 2 Longitudinal strength
2.1 General
2.2 Calculation of hull section modulus
2.3 Still water bending moments and shear forces
2.4 Design vertical wave bending moments
2.5 Design wave shear force
2.6 Buckling strength

Section 3 Deck structure
3.1 Loading
3.2 Deck plating
3.3 Deck stiffening
3.4 Deck supporting primary structure

Section 4 Shell envelope plating
4.1 Bottom and side shell
4.2 Bow flare and wave impact pressures
4.3 Strengthening for wave impact loads

Section 5 Shell envelope framing
5.1 Side structure
5.2 Strengthening for wave impact loads

Section 6 Double bottom
6.1 General
6.2 Transmission of pillar loads
6.3 Ferries and passenger ships with a specified operating area service

Section 7 Peak, watertight and deep tank bulkheads
7.1 General
7.2 Ferries and passenger ships with a specified operating area service

Section 8 Bow doors and inner doors
8.1 Symbols
8.2 General
8.3 Scantlings
8.4 Vehicle ramps
8.5 Arrangements for the closing, securing and supporting of doors
8.6 Design of securing and supporting devices
8.7 Operating and Maintenance Manual

Section 9 Subdivision structure on vehicle deck
9.1 General
9.2 Design loads
9.3 Height of subdivision structure
9.4 Material
9.5 Scantlings of subdivision structure other than doors
9.6 Scantlings of subdivision doors
9.7 Closing, securing and supporting of subdivision doors
9.8 Access doors
9.9 Watertightness and drainage
9.10 Ventilation of vehicle deck spaces
9.11 Operating and Maintenance Manual

Section 10 Masts and standing rigging
10.1 General
10.2 Design loadings and allowable stresses
10.3 Materials of mast construction
10.4 Standing rigging
10.5 Design loadings
10.6 Shroud and stay attachment points
10.7 Materials for rigging
10.8 Testing and certification

Contents

Section 11 Miscellaneous openings
11.1 General
11.2 Openings in main vehicle deck
11.3 Strength assessment of windows in large passenger ships
11.4 Frame design and testing

Section 12 Glass structures
12.1 General
12.2 Strength of mullions
12.3 Top rail of balcony balustrades
12.4 Glass balustrades

Section 13 Direct calculation
13.1 Application
13.2 Procedures

CHAPTER 3 TUGS

Section 1 General
1.1 Application
1.2 Class notations
1.3 Information required

Section 2 Longitudinal strength
2.1 General

Section 3 Floors in single bottoms
3.1 Floors

Section 4 Panting and strengthening of bottom forward
4.1 Panting region reinforcement
4.2 Strengthening of bottom forward

Section 5 Machinery casings
5.1 Escape hatches

Section 6 Freeing arrangements
6.1 General

Section 7 Towing arrangements
7.1 Towing equipment
7.2 Towing equipment foundations

Section 8 Fenders
8.1 Ship's side fenders

Section 9 Escort operation, performance numeral and trials
9.1 General
9.2 Towing arrangements
9.3 Performance trials

CHAPTER 4 OFFSHORE SUPPLY SHIPS

Section 1 General
1.1 Application
1.2 Class notations
1.3 Information required
1.4 Symbols

Section 2 Longitudinal strength
2.1 General

Contents

Part 4

Section 3 Hull envelope plating
3.1 Side shell
3.2 Weather decks
3.3 Cargo containment

Section 4 Hull envelope framing
4.1 Transverse framing

Section 5 Superstructures and deckhouses
5.1 Scantlings

Section 6 Miscellaneous openings
6.1 General
6.2 Access from freeboard deck
6.3 Windows and side scuttles

Section 7 Watertight bulkhead doors
7.1 Watertight doors

Section 8 Engine exhaust outlets
8.1 Location

Section 9 Transport and handling of limited amounts of hazardous and noxious liquid substances in bulk
9.1 General

CHAPTER 5 BARGES AND PONTOONS

Section 1 General
1.1 Application
1.2 Class notations
1.3 Information required
1.4 Symbols and definitions

Section 2 Longitudinal strength
2.1 General

Section 3 Hull envelope plating
3.1 Shell and deck plating

Section 4 Hull envelope framing
4.1 Symbols
4.2 General
4.3 Longitudinal framing
4.4 Transverse framing
4.5 Primary supporting structure

Section 5 Strengthening of bottom forward
5.1 Application

Section 6 Bottom strengthening for loading and unloading aground
6.1 Application

Section 7 Watertight bulkheads
7.1 Collision bulkheads

Contents

Part 4

CHAPTER 6 TRAWLERS AND FISHING VESSELS

Section 1 General
1.1 Application
1.2 Assignment of load lines
1.3 Class notations
1.4 Information required
1.5 Symbols and definitions

Section 2 Protection
2.1 Protection of steelwork
2.2 Protection of cargo

Section 3 Longitudinal strength
3.1 General

Section 4 Deck structure
4.1 Deck plating
4.2 Factory deck beams

Section 5 Shell envelope plating
5.1 Shell plating

Section 6 Shell envelope framing
6.1 Transverse side framing

Section 7 Watertight bulkheads
7.1 Collision bulkheads

Section 8 Stern ramp, and cruiser and transom sterns
8.1 Stern ramp
8.2 Cruiser and transom sterns

Section 9 Strengthening of bottom forward
9.1 General

CHAPTER 7 BULK CARRIERS

Section 1 General
1.1 General
1.2 Application
1.3 General class notations
1.4 Class notation for CSR bulk carriers
1.5 Class notation for non-CSR bulk carriers
1.6 Information required for CSR bulk carriers
1.7 Information required for non-CSR bulk carriers
1.8 Symbols and definitions

Section 2 Materials and protection
2.1 Materials and grades of steel
2.2 Protection of steelwork

Section 3 Longitudinal strength
3.1 General
3.2 Hull vertical bending stresses for flooded conditions
3.3 Shear stresses for flooded conditions
3.4 Flooded conditions

Section 4 Deck structure
4.1 General
4.2 Deck plating
4.3 Main cargo hatchway openings
4.4 Deck supporting structure

Contents

Section 5 Shell envelope plating
5.1 General
5.2 Bottom shell
5.3 Side shell

Section 6 Shell envelope framing
6.1 Longitudinal stiffening
6.2 Transverse stiffening
6.3 Primary supporting structure

Section 7 Topside tank structure
7.1 General
7.2 Bulkhead plating
7.3 Bulkhead stiffeners
7.4 Shell and deck structure
7.5 Primary supporting structure
7.6 Structural details

Section 8 Double bottom structure
8.1 General
8.2 Carriage of heavy cargoes
8.3 Carriage of heavy cargoes with specified or alternate holds empty
8.4 Ships to be classed '100A1 bulk carrier, strengthened for heavy cargoes, any hold may be empty, ESP'
8.5 Ballast ducts
8.6 Structural details in way of double bottom tank and hopper tank knuckle
8.7 Combined double bottom/hopper tank and topside tank
8.8 Allowable hold loading in the flooded condition

Section 9 Hopper side tank structure
9.1 General
9.2 Sloped bulkhead plating
9.3 Sloped bulkhead stiffeners
9.4 Shell and bilge stiffeners
9.5 Tank end bulkheads
9.6 Primary supporting structure
9.7 Structural details

Section 10 Bulkheads
10.1 General
10.2 Bulkheads supported by stools
10.3 Structural details in way of holds confined to dry cargoes
10.4 Vertically corrugated transverse watertight bulkheads – application and definitions
10.5 Vertically corrugated transverse watertight bulkheads – scantling assessment
10.6 Vertically corrugated transverse bulkheads – support structure at ends

Section 11 Direct calculation
11.1 Application
11.2 Procedures

Section 12 Steel hatch covers
12.1 General
12.2 Stiffener arrangement
12.3 Closing arrangements
12.4 Load model
12.5 Allowable stress
12.6 Effective cross-sectional area of panel flanges for primary supporting members
12.7 Local net plate thickness
12.8 Net scantlings of secondary stiffeners
12.9 Net scantlings of primary supporting members
12.10 Hatch cover plating
12.11 Hatch cover secondary stiffeners
12.12 Web panels of hatch cover primary supporting members
12.13 Deflection limit and connections between hatch cover panels

Contents

Section 13 Hatch coamings
13.1 General
13.2 Load model
13.3 Local net plate thickness
13.4 Net scantlings of longitudinal and transverse secondary stiffeners
13.5 Net scantlings of coaming stays
13.6 Local details

Section 14 Forecastles
14.1 Arrangement
14.2 Construction

CHAPTER 8 CONTAINER SHIPS

Section 1 General
1.1 Application and definitions
1.2 Structural configuration
1.3 Class notations
1.4 Information required
1.5 Symbols and definitions

Section 2 Materials
2.1 Materials
2.2 Protection of steelwork

Section 3 Longitudinal strength
3.1 General
3.2 Longitudinal strength
3.2 Combined longitudinal and torsional strength

Section 4 Deck structure
4.1 General
4.2 Primary supporting structure
4.3 Deck plating and stiffeners
4.4 Cross decks
4.5 Deck openings
4.6 Local reinforcement
4.7 Support for container corner seats

Section 5 Shell envelope plating
5.1 General
5.2 Bottom shell and bilge
5.3 Side shell and sheerstrake

Section 6 Shell envelope framing
6.1 General
6.2 Side shell primary supporting structure
6.3 Side stringers in double skin construction
6.4 Transverse webs in double skin construction
6.5 Minimum thickness of transverse web/side stringers in double skin construction

Section 7 Double bottom structure
7.1 General
7.2 Double bottom primary supporting structure
7.3 Inner bottom plating and stiffening
7.4 Girders
7.5 Floors
7.6 Support for containers

Contents

Section 8 Longitudinal bulkheads
8.1 General
8.2 Side shell primary supporting structure
8.3 Plating and stiffeners
8.4 Support for container corner seats

Section 9 Transverse bulkheads
9.1 General
9.2 Transverse watertight/non-watertight bulkhead primary supporting structure
9.3 Transverse watertight bulkheads
9.4 Transverse non-watertight mid-hold bulkheads

Section 10 Hatch coamings and support for hatch covers
10.1 Hatch coamings
10.2 Support for inboard edges of hatch covers by girders
10.3 Support for hatch cover fillings

Section 11 Hatch covers
11.1 General
11.2 Direct calculations
11.3 Omission of hatch cover gaskets
11.4 Omission of hatch covers

Section 12 Strengthening for wave impact loads
12.1 General

Section 13 Container stowage systems
13.1 Cell guide systems
13.2 Stowage on decks/hatch covers

Section 14 Direct calculation
14.1 Procedures for calculation of combined longitudinal and torsional strength
14.2 Procedures for verification of primary structure scantlings

Section 15 Requirements for ships with large deck openings
15.1 Application
15.2 Definitions and information required
15.3 Symbols and definitions
15.4 Design loadings
15.5 Combined stress
15.6 Permissible stress

CHAPTER 9 DOUBLE HULL OIL TANKERS

Section 1 General
1.1 General
1.2 Application and ship arrangement
1.3 Class notation and applicable Rules for CSR Double Hull Oil Tankers
1.4 Class notation and applicable Rules for non-CSR Double Hull Oil Tankers
1.5 General definitions and symbols
1.6 Information required for CSR Double Hull Oil Tankers
1.7 Information required for non-CSR Double Hull Oil Tankers

Section 2 Materials and protection
2.1 General
2.2 Corrosion protection coatings for salt water ballast spaces
2.3 Aluminium structure, fittings and paint
2.4 Other materials

Section 3 Longitudinal strength
3.1 General
3.2 Symbols
3.3 Loading conditions

Contents Part 4

Section 4 Hull envelope plating
4.1 General
4.2 Symbols
4.3 Deck plating
4.4 Sheerstrake
4.5 Shell plating
4.6 Bilge plating
4.7 Keel
4.8 Taper of higher tensile steel
4.9 Thicknesses at ends of erections
4.10 Deck openings
4.11 Shell openings
4.12 Superstructures

Section 5 Hull framing
5.1 General
5.2 Symbols
5.3 Deck, side and bottom longitudinals
5.4 Bilge longitudinals and brackets
5.5 Deck longitudinals outside 0,4*L* amidships
5.6 Stability of longitudinals
5.7 Connections of longitudinals
5.8 Openings in longitudinals
5.9 Transverse side frames

Section 6 Inner hull, inner bottom and longitudinal oiltight bulkheads
6.1 General
6.2 Symbols
6.3 Inner hull and longitudinal bulkheads
6.4 Longitudinal corrugated bulkheads
6.5 Inner bottom
6.6 Hopper side tank
6.7 Connections

Section 7 Transverse oiltight bulkheads
7.1 General
7.2 Symbols
7.3 Corrugated bulkheads
7.4 Bulkheads supported by stools
7.5 Connections

Section 8 Non-oiltight bulkheads
8.1 General
8.2 Symbols
8.3 Scantlings
8.4 Connections

Section 9 Primary members supporting longitudinal framing
9.1 General
9.2 Symbols
9.3 Girders and floors in double bottom
9.4 Vertical webs and horizontal girders in wing ballast tanks and hopper spaces
9.5 Deck transverses and girders
9.6 Cross-ties
9.7 Primary members supporting oiltight bulkheads
9.8 Primary members supporting non-oiltight bulkheads

Contents

Section 10 Construction details and minimum thickness
10.1 Symbols
10.2 Compartment minimum thickness
10.3 Geometric properties and proportions of members
10.4 Continuity of primary members
10.5 Primary member web plate stiffening
10.6 Inertia and dimensions of stiffeners
10.7 Application of stiffening requirements
10.8 Stiffening of continuous longitudinal girders
10.9 Stiffening of vertical webs on transverse bulkheads
10.10 Double bottom girders in way of docking supports
10.11 Lateral stability of primary members
10.12 Openings in web plating
10.13 Brackets connecting primary members
10.14 Arrangements at intersections of continuous secondary and primary members

Section 11 Ships for alternate carriage of oil cargo and dry bulk cargo
11.1 Application
11.2 Class notations
11.3 Structural configuration and ship arrangement
11.4 Bulkheads in way of dry/oil cargo holds
11.5 Bulkheads in wing tanks of ore or oil carriers
11.6 Cofferdam bulkheads
11.7 Hatchways
11.8 Hatch coamings

Section 12 Heated cargoes
12.1 General
12.2 Carriage of heated cargoes
12.3 Loading of hot oil cargoes

Section 13 Access arrangements and closing appliances
13.1 General
13.2 Access to spaces in the cargo area

Section 14 Direct calculations
14.1 Application
14.2 Procedures

CHAPTER 10 SINGLE HULL OIL TANKERS

Section 1 General
1.1 Application
1.2 Class notations

Section 2 Primary members supporting longitudinal framing
2.1 General
2.2 Symbols
2.3 Structural arrangements
2.4 Bottom structure coefficients
2.5 Bottom transverses
2.6 Bottom girders
2.7 Side transverses
2.8 Deck transverses
2.9 Deck girders
2.10 Cross-ties
2.11 Double bottom girders and floors

Section 3 Primary members supporting transverse side framing
3.1 General
3.2 Symbols
3.3 Structural arrangements
3.4 Scantlings

Contents

Section 4 Primary members supporting oiltight bulkheads
4.1 General
4.2 Symbols
4.3 Structural arrangements
4.4 Scantlings

Section 5 Primary members supporting non-oiltight bulkheads
5.1 General
5.2 Symbols
5.3 Direct calculations
5.4 Scantlings and arrangements

Section 6 Trunked construction
6.1 General
6.2 Symbols
6.3 Structural arrangements
6.4 Trunk scantlings
6.5 Modification to hull scantlings

Section 7 Construction details and minimum thickness
7.1 Symbols
7.2 Compartment minimum thickness
7.3 Geometric properties and proportions of members
7.4 Continuity of primary members
7.5 Primary member web plate stiffening
7.6 Inertia and dimensions of stiffeners
7.7 Application of stiffening requirements
7.8 Stiffening of continuous longitudinal girders
7.9 Stiffening of vertical webs on transverse bulkheads
7.10 Docking brackets on bottom centreline girder
7.11 Lateral stability of primary members
7.12 Openings in web plating
7.13 Brackets connecting primary members
7.14 Arrangements at intersections of continuous secondary and primary members

CHAPTER 11 ORE CARRIERS

Section 1 General
1.1 Application
1.2 Structural configuration and ship arrangement
1.3 Class notation
1.4 Symbols and definitions

Section 2 Materials and protection
2.1 Materials and grades of steel
2.2 Corrosion protection coating for salt water ballast spaces

Section 3 Longitudinal strength
3.1 General

Section 4 Hull envelope plating
4.1 General
4.2 Deck plating in way of ore hatchways
4.3 Hatchways
4.4 Hatch coamings

Section 5 Hull framing
5.1 General
5.2 Symbols
5.3 Bottom longitudinals in double bottom tanks
5.4 Deck structure in way of centre hold
5.5 Primary and secondary members inside line of ore hatchways

Contents

Section 6 Double bottom construction
6.1 General
6.2 Arrangement

Section 7 Longitudinal bulkheads
7.1 General

Section 8 Transverse bulkheads
8.1 General
8.2 Transverse watertight bulkheads in wing tanks
8.3 Transverse watertight bulkheads in centre holds
8.4 Non-watertight bulkheads

Section 9 Primary structure in wing tanks
9.1 General
9.2 Scarfing of double bottom

Section 10 Direct calculations
10.1 Application
10.2 Procedures

Section 11 Forecastles
11.1 General

CHAPTER 12 DREDGING AND RECLAMATION CRAFT

Section 1 General
1.1 Application
1.2 Stability
1.3 Class notations
1.4 Information required
1.5 Symbols

Section 2 Longitudinal strength
2.1 General
2.2 Loading conditions
2.3 Hull bending strength
2.4 Design vertical wave bending moments
2.5 Permissible still water bending moment for dredging conditions
2.6 Calculation of hull section modulus
2.7 Hull shear strength

Section 3 Deck structure
3.1 Deck plating
3.2 Deck stiffening
3.3 Deck supporting structure

Section 4 Shell envelope plating
4.1 Keel
4.2 Bottom shell
4.3 Operating aground
4.4 Bottom openings
4.5 Ships with chines
4.6 Side shell
4.7 Swim ends

Section 5 Shell envelope framing
5.1 Longitudinal stiffening
5.2 Transverse stiffening
5.3 Primary supporting structure at sides

Contents

Part 4

Section	**6**	**Bottom structure**
	6.1	General
	6.2	Single bottoms transversely framed
	6.3	Single bottoms longitudinally framed
	6.4	Double bottom – General
	6.5	Double bottom with transverse framing
	6.6	Double bottom with longitudinal framing
Section	**7**	**Bottom strengthening for operating aground**
	7.1	Application
Section	**8**	**Spoil space and well structure**
	8.1	Symbols and definitions
	8.2	General
	8.3	Spoil space and well boundaries
	8.4	Cross-members
	8.5	Pillars within hoppers
	8.6	Continuous coamings
Section	**9**	**Watertight bulkheads**
	9.1	Arrangements of bulkheads
Section	**10**	**Exposed casings**
	10.1	Scantlings and access
Section	**11**	**Dredging machinery seats and dredging gear**
	11.1	Dredging machinery seats
	11.2	Dredging gear
Section	**12**	**Ladder wells**
	12.1	Transverse strength at deck
Section	**13**	**Fenders**
	13.1	Fenders and reinforcement in way
Section	**14**	**Rudders**
	14.1	Rudders on bucket dredgers
Section	**15**	**Spoil space weirs and overflows**
	15.1	General
Section	**16**	**Scuppers and sanitary discharges and side scuttles**
	16.1	General
Section	**17**	**Split hopper dredgers and barges**
	17.1	Symbols and definitions
	17.2	Hull bending strength
	17.3	Separation arrangements
	17.4	Hinge pins
Section	**18**	**Direct calculations**
	18.1	Application
	18.2	Procedures

Section

1 **General**

2 **Materials and protection**

3 **Longitudinal strength**

4 **Deck structure**

5 **Shell envelope plating**

6 **Shell envelope framing**

7 **Single bottom structure**

8 **Double bottom structure**

9 **Bulkheads**

Section 1
General

1.1 Application

1.1.1 This Chapter applies to sea-going ships designed primarily for the carriage of general cargo. The requirements are intended to cover the midship region, but may also apply with suitable modification to the taper regions forward and aft in way of cargo spaces.

1.2 Structural configuration

1.2.1 The Rules provide for a basic structural configuration of a multi-deck or a single deck hull which includes a double bottom, or a single bottom arrangement. The structural configuration may also include a single or multiple arrangement of cargo hatch openings, and side tanks.

1.2.2 Individual consideration may be required where the ship incorporates double hull construction, large deck openings or other special design features.

1.2.3 Longitudinal framing is, in general, to be adopted at the strength deck outside line of openings and at the bottom, but special consideration will be given to proposals for transverse framing in these regions.

1.3 Class notations

1.3.1 In general, ships complying with the requirements of this Chapter will be eligible to be classed **100A1**.

1.3.2 Where a ship has been specially strengthened for heavy cargoes in accordance with the requirements listed in Ch 7,8.2, it will be eligible to be classed **100A1 strengthened for heavy cargoes**.

1.3.3 Ships intended to be operated only in suitable areas or conditions which have been agreed by the Committee, as defined in Pt 1, Ch 2,2.3.6 to 2.3.10, will receive individual consideration on the basis of the Rules with respect to the environmental conditions agreed for the design basis and approval.

1.3.4 The Regulations for classification and the assignment of class notations are given in Pt 1, Ch 2, to which reference should be made.

1.4 Information required

1.4.1 For the information required, *see* Pt 3, Ch 1,5. In addition the following are to be supplied:

(a) Cargo loadings on decks, hatchways and inner bottom if these are to be in excess of Rule. Where concentrated or point loads occur, their magnitude and points of application are to be defined.

(b) The maximum pressure head in service on tanks, also details of any double bottom tanks interconnected with side tanks.

(c) Details of the proposed depths of any partial fillings where water ballast or liquid cargo is intended to be carried in the holds, or large deep tanks.

1.5 Symbols and definitions

1.5.1 The following symbols and definitions are applicable to this Chapter unless otherwise stated:

L, B, D, T and V as defined in Pt 3, Ch 1,6

k_L, k = higher tensile steel factor, *see* Pt 3, Ch 2,1

e = base of natural logarithms, 2,7183

l = overall length of stiffening member, or pillar, in metres, *see* Pt 3, Ch 3,3

l_e = effective length of stiffening member, or pillar, in metres, *see* Pt 3, Ch 3,3

t = thickness of plating, in mm

s = spacing of secondary stiffeners, in mm

A = cross-sectional area of stiffening member, in cm^2

C = stowage rate, in m^3/tonne, *see* Pt 3, Ch 3,5

C_w = a wave head in metres
= $7{,}71 \times 10^{-2}\, Le^{-0{,}0044L}$

I = inertia of stiffening member, in cm^4, *see* Pt 3, Ch 3,3

S = spacing or mean spacing of primary members, in metres

Z = section modulus of stiffening member, in cm^3, *see* Pt 3, Ch 3,3

ρ = relative density (specific gravity) of liquid carried in a tank but is not to be taken less than 1,025.

■ *Section 2* Materials and protection

2.1 Materials and grades of steel

2.1.1 Materials and grades of steel are to comply with the requirements of Pt 3, Ch 2.

2.2 Protection of steelwork

2.2.1 For the protection of steelwork, in addition to the requirements specified in Pt 3, Ch 2,3 the requirements of 2.2.2 to 2.2.4 are to be complied with.

2.2.2 Ceiling is to be laid on the inner bottom under cargo hatchways, but may be omitted provided that the inner bottom plating is increased by 2 mm. In any ship which is regularly to be discharged by grabs, ceiling is to be laid on the inner bottom, and the inner bottom plating increased by 3 mm. Alternatively, the ceiling may be omitted provided that the inner bottom plating is increased in thickness by a minimum of 5 mm. The ceiling is to be 76 mm thick in softwood or 65 mm thick in hardwood, and is to be laid at right angles to the inner bottom stiffening. Where it is intended to use plywood or other forms of ceiling of an approved type instead of planking, the thickness will be considered for each case. Ceiling is also to be laid over bilges, and fitted with portable sections which are to be readily removable. The spaces between the frames at the top of the bilge ceiling are to be closed by steel plates, wood chocks, cement or other suitable means. Inner bottom manhole covers or fittings, where projecting above the inner bottom plating, are to be provided with a steel protection coaming around each manhole, and a wood or steel cover is to be fitted.

2.2.3 Where plated decks are sheathed with wood or approved compositions, the minimum thicknesses given in 4.2, Pt 3, Ch 5,2 and Pt 3, Ch 6,2 may be reduced by 10 per cent for a 50 mm sheathing thickness or five per cent for 25 mm, with intermediate values in proportion. The steel deck is to be coated with a suitable material in order to prevent corrosive action, and the sheathing or composition is to be effectively secured to the deck. *See also* the fire protection requirements relating to deck coverings in the relevant SOLAS Regulations or Pt 6, Ch 4,3 as applicable.

2.2.4 Where cargo battens or equivalent are fitted in the holds of dry cargo ships, the descriptive note 'SF' will be entered in the *Register Book.* The battens, when fitted, are to extend from above the upper part of the bilge to the underside of beam knees in the holds, and in all cargo spaces in the 'tween decks and superstructures, up to the underside of beam knees. Wood cargo battens are to be not less than 50 mm in thickness, and the clear space between adjacent rows is, in general, not to exceed 230 mm. The dimensions and spacing of battens made of other materials will be considered. Nets may be adopted in lieu of battens, and other alternative proposals will be specially considered. For arrangements in way of a refrigerated hold, *see* Pt 6, Ch 3,4.

■ *Section 3* Longitudinal strength

3.1 General

3.1.1 Longitudinal strength calculations are to be made in accordance with the requirements given in Pt 3, Ch 4.

3.1.2 The requirements of Pt 3, Ch 4,8.3 regarding loading instruments are not applicable to general cargo ships under 120 m.

3.2 Fast cargo ships

3.2.1 The hull section modulus for ships of length, L, between 120 m, and 170 m, and maximum service speed greater than 17,5 knots in association with a bow shape factor, ψ, of more than 0,15, is to comply with the requirements of this sub-Section.

3.2.2 The bow shape factor is defined as:

$$\Psi = \frac{100\,\Sigma A_b}{L^{1,5}\,B}$$

where

a_0 = projection of upper deck at waterline (F.P.), in metres

a_1 = projection of upper deck at waterline (0,1L from F.P.), in metres

a_2 = projection of upper deck at waterline (0,2L from F.P.), in metres

b = projection of upper deck at waterline (F.P. to bow line), in metres

$$\Sigma A_b = \frac{ba_0}{2} + 0{,}1L\,(a_1 + a_2) \quad \text{m}^2$$

See also Fig. 1.3.1.

3.2.3 For longitudinal strength requirements, the Rule minimum hull midship section modulus and the distribution of longitudinal material in the forward half-length will be considered. In general, the following requirements are to be complied with:

(a) The vertical hull midship section modulus, about the horizontal neutral axis, at deck is to be not less than $331Lk\Sigma A_b$ cm^3, or that required by Pt 3, Ch 4,5, whichever is the greater. ΣA_b is defined in 3.2.2.

(b) The horizontal hull midship section modulus, about a vertical axis through the ship centreline, is to be not less than $32{,}5L^2D$ cm^3.

(c) In the forward half-length, the hull section modulus is not to be a lesser percentage of the midship value than that shown in Table 1.3.1.

(d) Any load or ballast condition resulting in a sagging still water bending moment, or a hogging moment less than 80 per cent of the Rule value of still water bending moment, will be specially considered with a view to minimizing the compressive stresses in the deck in waves.

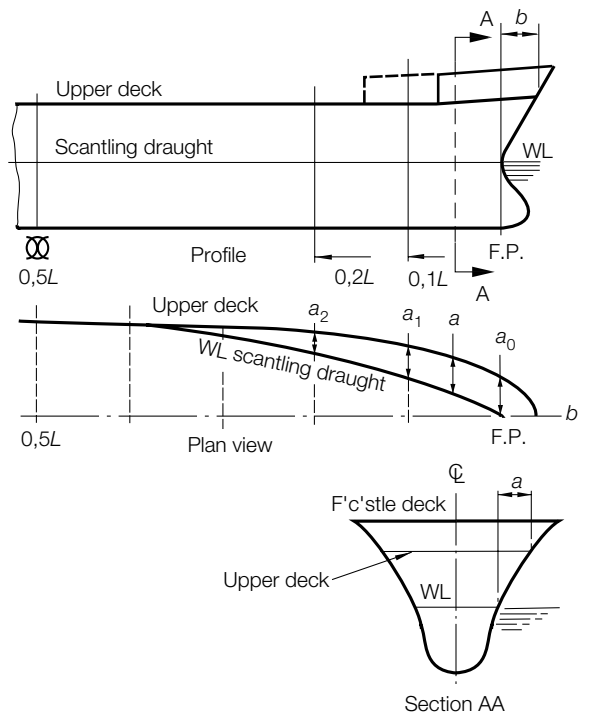

Fig. 1.3.1 Derivation of bow shape factor

Table 1.3.1 Fast cargo ships

Position	Percentage of midship vertical modulus (modulus about horizontal axis)	Percentage of midship horizontal modulus (modulus about vertical axis)
Station 10 (mid-L_{pp})	100	100
12	98	87
14	95	62
16	81	38
18	44	17
20 (F.P.)	0	0

NOTES
1. Intermediate values to be obtained by interpolation.
2. L_{pp} as defined in Pt 3, Ch 1,6.

3.2.4 For local strength, in general the following requirements are to be complied with:

(a) Longitudinal deck stiffening is to be carried forward to the fore peak bulkhead or as far forward as practical. Where a long forecastle is fitted, the buckling strength of the proposed structure will be specially considered.

(b) Substantial web frames in way of deck transverses are to be fitted in the forward half-length. Scantlings of webs and frames are to be based on actual lengths, not 'tween deck heights, and collars are to be fitted at ends of members in way of high shear.

(c) Scantlings of bottom structure in forward part are to be specially considered.

(d) Deck and side shell panels forward of 0,5*L* from F.P. are to be examined to establish the critical buckling stress from the following formula:

$$\sigma_c = \frac{\pi^2 E}{12\,(1-\nu^2)}\left(\frac{t}{s}\right)^2 K_c \quad \text{N/mm}^2\ (\text{kgf/mm}^2)$$

where

s = length of shorter edge, in mm

t = thickness of plating, in mm

E = Young's modulus, in N/mm^2 (kgf/mm^2)

K_c = a factor depending on aspect ratio and boundary restraint

= 4 for longitudinally stiffened plating or as shown in Fig. 1.3.2 for transversely stiffened plating

ν = Poisson's ratio (0,3 for steel and aluminium alloy).

Where the buckling stresses, as evaluated, exceed 50 per cent of yield stress, the actual critical buckling stress is given by:

$$\sigma_{ac} = \sigma_o\left(1 - \frac{\sigma_o}{4\sigma_c}\right) \quad \text{N/mm}^2\ (\text{kgf/mm}^2)$$

where

σ_{ac} = corrected critical buckling stress, in N/mm^2 (kgf/mm^2)

σ_o = yield stress, in N/mm^2 (kgf/mm^2)

The critical buckling stress from the above formulae must be not less than 176,6 N/mm^2 (18,0 kgf/mm^2) within 0,4*L* amidships, nor less than 147,2 N/mm^2 (15,0 kgf/mm^2) for the deck forward of this, nor less than 117,7 N/mm^2 (12,0 kgf/mm^2) for the side shell between the first and second deck forward of 0,5*L* from F.P. For higher tensile steel plating, the above permissible stresses are to be divided by *k*.

(e) In order to obtain the necessary critical buckling strength, either of the following is to be applied:

(i) plate thickness to be increased, or

(ii) panel aspect ratio to be altered by the fitting of additional panel stiffening.

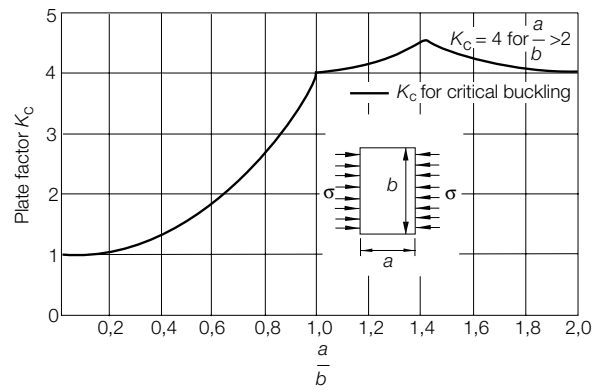

Fig. 1.3.2 Plate factor, K_c

Section 4
Deck structure

4.1 General

4.1.1 Longitudinal framing is, in general, to be adopted at the strength deck outside line of openings, but special consideration will be given to proposals for transverse framing. Requirements are given in this Section for longitudinal and transverse framing systems of all deck structure, except decks in way of erections. For erection decks, *see* Pt 3, Ch 8.

4.2 Deck plating

4.2.1 The thickness of strength/weather deck plating in the midship region is to comply with the requirements of Table 1.4.1. Outside the line of openings the thickness is also to be that necessary to give the hull section modulus required by Pt 3, Ch 4,5.

4.2.2 The thickness of lower deck plating in the midship region is to comply with the requirements of Table 1.4.2.

4.2.3 The thickness of the strength deck stringer plate is to be increased by 20 per cent at the ends of bridges, poop and forecastle.

4.2.4 The deck plating thickness and supporting structure are to be suitably reinforced in way of cranes, masts, derrick posts and deck machinery.

4.2.5 Where long, wide hatchways are arranged on lower decks, it may be necessary to increase the deck plating thickness to ensure effective support for side framing.

4.3 Deck stiffening

4.3.1 The scantlings of strength/weather deck longitudinals in the midship region are to comply with the requirements of Table 1.4.3.

4.3.2 The lateral and torsional stability of longitudinals together with web and flange buckling criteria are to be verified in accordance with Pt 3, Ch 4,7.

4.3.3 The scantlings of cargo and accommodation deck longitudinals are to comply with the requirements of Table 1.4.4.

4.3.4 End connections of longitudinals to bulkheads are to provide adequate fixity and, so far as is practicable, direct continuity of longitudinal strength. Where L exceeds 215 m, the deck longitudinals are to be continuous through transverse structure, including bulkheads, but alternative arrangements will be considered. Higher tensile steel deck longitudinals are to be continuous irrespective of the ship length.

4.3.5 The scantlings of strength/weather, cargo and accommodation deck transverse beams are to comply with the requirements of Table 1.4.5.

Table 1.4.1 Strength/weather deck plating

Location	Minimum thickness, in mm *see also* 4.2.1	
	Longitudinal framing	Transverse framing
(1) Outside line of openings (*see* Notes 1 and 2)	The greater of the following: (a) $t = 0{,}001 s_1 (0{,}059 L_1 + 7)\sqrt{\frac{F_D}{k_L}}$ (b) $t = 0{,}00083 s_1 \sqrt{Lk} + 2{,}5$	The greater of the following: (a) $t = 0{,}001 s_1 f_1 (0{,}083 L_1 + 10)\sqrt{\frac{F_D}{k_L}}$ (b) $t = 0{,}001 s_1 \sqrt{Lk} + 2{,}5$
(2) Inside line of openings (*see* Note 2)	$t = 0{,}00083 s_1 \sqrt{Lk} + 2{,}5$ but not less than 6,5	$t = 0{,}00083 s_1 \sqrt{Lk} + 1{,}5$ but not less than 6,5
(3) In way of the crown of a tank	$t = 0{,}004 sf \sqrt{\frac{\rho k h_4}{1{,}025}} + 3{,}5$ or as (1) or (2), whichever is the greater, but not less than 7,5 mm where $L \geq 90$ m, or 6,5 mm where $L < 90$ m	

Symbols

L, k_L, k, ρ, s, S as defined in 1.5.1

$f = 1{,}1 - \frac{s}{2500S}$ but not to be taken greater than 1,0

$f_1 = \frac{1}{1 + \left(\frac{s}{1000S}\right)^2}$

h_4 = tank head, in metres, as defined in Pt 3, Ch 3,5

s_1 = s but is not to be taken less than the smaller of $470 + \frac{L}{0{,}6}$ mm or 700 mm

F_D = as defined in Pt 3, Ch 4,5.6

L_1 = L but need not be taken greater than 190 m

NOTES
1. The thickness derived in accordance with (1) is also to satisfy the buckling requirements of Pt 3, Ch 4,7.
2. The deck thickness is to be not less than the basic end deck thickness as given in Pt 3, Ch 5 and Ch 6.

Table 1.4.2 Lower deck plating

Symbols	Location	Minimum thickness, in mm	
		Second deck	Third or platform decks
s, S, k, ρ as defined in 1.5.1 b = breadth of increased plating, in mm $f = 1{,}1 - \frac{s}{2500S}$ but not to be taken greater than 1,0 h_4 = tank head, in metres, as defined in Pt 3, Ch 3,5 s_1 = s but is not to be taken less than the smaller of $470 + \frac{L}{0{,}6}$ mm or 700 mm A_f = girder face area, in cm^2 K_1 = 2,5 mm at bottom of tank = 3,5 mm at crown of tank	(1) Outside line of openings	$t = 0{,}012 s_1 \sqrt{k}$ but not less than 6,5	$t = 0{,}01 s_1 \sqrt{k}$ but not less than 6,5
	(2) Inside line of openings	$t = 0{,}01 s_1 \sqrt{k}$ but not less than 6,5	
	(3) In way of the crown or bottom of a tank	$t = 0{,}004 sf \sqrt{\frac{\rho k h_4}{1{,}025}} + K_1$ but not less than 7,5 where $L \geq 90$ m, or 6,5 where $L < 90$ m	
	(4) Plating forming the upper flange of underdeck girders	Clear of deck openings, $t = \sqrt{\frac{A_f}{1{,}8k}}$ In way of deck openings, $t = 1{,}1\sqrt{\frac{A_f}{1{,}8k}}$ Minimum breadth, b = 760 mm	
NOTE Where a deck loading exceeds 43,2 kN/m^2 (4,4 tonne-f/m^2), the thickness of plating will be specially considered.			

Table 1.4.3 Strength/weather deck longitudinals

Symbols	Location	Modulus, in cm^3	Inertia, in cm^4
L, s, k_L, k, ρ as defined in 1.5.1 b = 1,4 for rolled or built sections = 1,6 for flat bars $c_1 = \frac{60}{225 - 165 F_D}$ d_w = depth of longitudinal, in mm F_1 = $0{,}25 c_1$ h_1 = weather head, in metres, as defined in Pt 3, Ch 3,5 h_4 = tank head, in metres, as defined in Pt 3, Ch 3,5 l_e = as defined in 1.5.1, but not to be taken less than 1,5 m F_D = as defined in Pt 3, Ch 4,5.6 $h_{T1} = \frac{L_1}{56}$ for Type 'B–60' ships = the greater of $\frac{L_1}{70}$ or 1,20 m for Type 'B' ships L_1 = L but need not be taken greater than 190 m L_2 = L but need not be taken greater than 215 m	(1) In way of dry cargo spaces, *see* Note 1		
	(a) Outside line of openings	$Z = 0{,}043\, s\, k\, h_{T1}\, l_e^2\, F_1$	—
	(b) Inside line of openings	$Z = s\, k\, (400 h_1 + 0{,}005\, (l_e L_2)^2) \times 10^{-4}$	—
	(2) In way of the crown or bottom of a tank	$Z = \frac{0{,}0113\, \rho\, s k\, h_4\, l_e^2}{b}$ or as (1)(a) or (1)(b) above, whichever is the greater	$I = \frac{2{,}3}{k} l_e Z$
	(3) In way of superstructure	To be specially considered	—
	NOTES 1. Where weather decks are intended to carry deck cargo and the load is in excess of 8,5 kN/m^2 (0,865 tonne-f/m^2), the scantlings of longitudinals may be required to be increased to comply with the requirements for location (1) Table 1.4.4 using the equivalent design head, for specified cargo loading, for weather decks given in Table 3.5.1 in Pt 3, Ch 3. 2. The buckling requirements of Pt 3, Ch 4,7 are to be complied with. The ratio of the web depth d_w to web thickness t is to comply with the following requirements: (a) Built up profiles and rolled angles: $\frac{d_w}{t} \leq 60\sqrt{k_L}$ (b) Flat bars: $\frac{d_w}{t} \leq 18\sqrt{k_L}$ when continuous at bulkheads; $\frac{d_w}{t} \leq 15\sqrt{k_L}$ when non-continuous at bulkheads 3. The web depth of longitudinals, d_w is to be not less than 60 mm.		

Table 1.4.4 Cargo and accommodation deck longitudinals

Symbols	Location	Modulus, in cm^3	Inertia, in cm^4
L, s, k, ρ as defined in 1.5.1 d_w = web depth of longitudinal, in mm, *see* Note 2 h_2 = cargo head, in metres, as defined in Pt 3, Ch 3,5 h_3 = accommodation head, in metres, as defined in Pt 3, Ch 3,5 h_4 = tank head, in metres, as defined in Pt 3, Ch 3,5 l_e = as defined in 1.5.1, but not to be taken less than 1,5 m L_1 = L but need not be taken greater than 190 m γ = 1,4 for rolled or built sections = 1,6 for flat bars	(1) Cargo decks (a) $L \geq 90$ m (b) $L < 90$ m	 $Z = sk(5{,}9L_1 + 25h_2 l_e^2) \times 10^{-4}$ $Z = 0{,}005s\,k\,h_2\,l_e^2$	 — —
	(2) Accommodation decks (a) $L \geq 90$ m (b) $L < 90$ m	 $Z = sk(5{,}1L_1 + 25h_3 l_e^2) \times 10^{-4}$ $Z = 0{,}00425s\,k\,h_3\,l_e^2$ *See* Note 1	 — —
	(3) In way of the crown or bottom of a tank	As in (1) or (2) as applicable, or $Z = \dfrac{0{,}0113\rho\,s\,k\,h_4\,l_e^2}{\gamma}$ whichever is the greater	$I = \dfrac{2{,}3}{k}\,l_e Z$

NOTES
1. The section modulus of accommodation deck longitudinals need not be taken greater than the value required by location (1)(a), in Table 1.4.3 .
2. The web depth of longitudinals, d_w, to be not less than 60 mm.

Table 1.4.5 Strength/weather, cargo and accommodation deck beams

Symbols	Location	Modulus, in cm^3	Inertia, in cm^4
B, D, T, s, k, ρ as defined in 1.5.1 d_w = depth of beam, in mm h_1 = weather deck head h_2 = cargo head h_3 = accommodation head h_4 = tank head } in metres, *see* Pt 3, Ch 3,5 l_e as defined in 1.5.1, but to be taken as not less than 1,83 m B_1 = B, but need not be taken greater than 21,5 m K_1 = a factor dependent on the number of decks (including poop and bridge superstructures) at the position of the beam under consideration: 1 deck 20,0 3 decks 10,5 2 decks 13,3 4 or more 9,3 K_2 = a factor dependent on the location of the beam: at short bridge and poops 133 elsewhere 530 K_3 = a factor dependent on the location of the beam: span adjacent to the ship side 3,6 elsewhere 3,3 γ = 1,4 for rolled or built sections = 1,6 for flat bars	(1) Strength/weather decks	The lesser of the following: (a) $Z = (K_1 K_2 T D + K_3 B_1 s\,h_1 l_e^2)\,k \times 10^{-4}$ (b) $Z = 2K_3 B_1 s\,k\,h_1 l_e^2 \times 10^{-4}$	—
	(2) Cargo decks	$Z = (400K_1 T D + 38{,}8s\,h_2 l_e^2)\,k \times 10^{-4}$	—
	(3) Accommodation decks	$Z = (530K_1 T D + 38{,}8s\,h_3 l_e^2)\,k \times 10^{-4}$	—
	(4) In way of the crown or bottom of a tank	As (1), (2) or (3) as applicable, or $Z = \dfrac{0{,}0113\rho\,s\,k\,h_4\,l_e^2}{\gamma}$ whichever is the greater	$I = \dfrac{2{,}3}{k}\,l_e Z$

NOTES
1. Where weather decks are intended to carry deck cargo and the load is in excess of 8,5 kN/m^2 (0,865 tonne-f/m^2), the scantlings of beams may be required to be increased to comply with the requirements for location (2) using the equivalent design head, for specified cargo loading, for weather decks given in Table 3.5.1 in Pt 3, Ch 3.
2. The web depth of beams, d_w, is to be not less than 60 mm.

4.3.6 The end connections of beams are to be in accordance with the requirements of Pt 3, Ch 10,3.

4.4 Deck supporting structure

4.4.1 **Girders and transverses** supporting deck longitudinals and beams, also hatch side girders and hatch end beams, are to comply with the requirements of Table 1.4.6. In general, transverses, webs or frames of increased scantlings, *see* Table 1.6.2, are to be arranged in way of hatch end beams and deck transverses, and these are to be in line with the double bottom floors where practicable. Equivalent transverse ring scantling arrangements will be considered.

4.4.2 **Transverses** supporting deck longitudinals are, in general, to be spaced not more than 3,8 m apart where the length, *L*, is 100 m or less, and (0,006*L* + 3,2) m apart where *L* is greater than 100 m.

4.4.3 The web thickness, stiffening arrangements and end connection of primary supporting members are to be in accordance with Pt 3, Ch 10,4.

4.4.4 Where a girder is subject to concentrated loads, such as pillars out of line, the scantlings are to be suitably increased. Also, where concentrations of loading on one side of the girder may occur, the girder is to be adequately stiffened against torsion. Reinforcements may be required in way of localized areas of high stress.

4.4.5 **Pillars** are to comply with the requirements of Table 1.4.7.

4.4.6 Pillars are to be fitted in the same vertical line wherever possible, and effective arrangements are to be made to distribute the load at the heads and heels of all pillars. Where pillars support eccentric loads, they are to be strengthened for the additional bending moment imposed upon them.

4.4.7 Tubular and hollow square pillars are to be attached at their heads to plates supported by efficient brackets, in order to transmit the load effectively. Doubling or insert plates are to be fitted to the inner bottom under the heels of tubular or hollow square pillars, and to decks under large pillars. The pillars are to have a bearing fit and are to be attached to the head and heel plates by continuous welding. At the heads and heels of pillars built of rolled sections, the load is to be well distributed by means of longitudinal and transverse brackets.

4.4.8 In double bottoms under widely spaced pillars, the connections of the floors to the girders, and of the floors and girders to the inner bottom, are to be suitably increased. Where pillars are not directly above the intersection of plate floors and girders, partial floors and intercostals are to be fitted as necessary to support the pillars. Manholes are not to be cut in the floors and girders below the heels of pillars. Where longitudinal framing is adopted in the double bottom, equivalent stiffening under the heels of pillars is to be provided, and where the heels of pillars are carried on a tunnel, suitable arrangements are to be made to support the load.

4.4.9 Where pillars are fitted inside tanks or under watertight flats, the tensile stress in the pillar and its end connections is not to exceed 108 N/mm^2 (11,0 kgf/mm^2) at the test heads. In general, such pillars should be of built sections, and end brackets may be required.

4.4.10 Pillars are to be fitted below deckhouses, windlasses, winches, capstans and elsewhere where considered necessary.

4.4.11 **Non-watertight pillar bulkheads** are to comply with the requirements of Table 1.4.8.

4.4.12 **Cantilevers** and their supporting frames are to comply with the requirements of Table 1.4.9.

4.5 Deck openings

4.5.1 The corners of main cargo hatchways in the strength deck within 0,5*L* amidships are to be elliptical, parabolic or rounded, with a radius generally not less than $^1/_{24}$ of the breadth of the opening. Rounded corners are to have a minimum radius of 300 mm if the deck plating extends inside the coaming, or 150 mm if the coamings are welded to the inner edge of the plating in the form of a spigot. Where elliptical corners are arranged, the major axis is to be fore and aft, the ratio of the major to minor axis is to be not less than 2 to 1 nor greater than 2,5 to 1, and the minimum half-length of the major axis is to be defined by l_1 in Fig. 1.4.5. Where parabolic corners are arranged, the dimensions are also to be as shown in Fig. 1.4.5.

4.5.2 Where the corners of large openings in the strength deck are parabolic or elliptical, insert plates are not required. For other shapes of corner, insert plates of the size and extent shown in Fig. 1.4.6 will, in general, be required. The required thickness of the insert plate is to be not less than 25 per cent greater than the adjacent deck thickness, outside line of openings with a minimum increase of 4 mm. The increase need not exceed 7 mm.

4.5.3 Welded attachments close to or on the free edge of the hatch corner plating are to be avoided (e.g. welded protection strips or shedder plates) and the butt welds of corner insert plates to the adjacent deck plating are to be located well clear of butts in the hatch coaming.

4.5.4 Openings in the strength deck outside the line of hatch openings are to be kept to the minimum number consistent with operational requirements. Openings are to be arranged clear of hatch corners and, so far as possible, clear of one another. Where, within 0,4*L* amidships, deck openings have a total breadth or shadow area breadth, in one transverse section that exceeds the limitation given in Pt 3, Ch 3,3.4.4 and 3.4.5, compensation will be required to restore the excess. This is generally to be arranged by increasing the deck plate thickness, but other proposals will be considered. Plate panels in which openings are cut are to be adequately stiffened, where necessary, against compression and shear buckling. The corners of all openings are to be well rounded and the edges smooth.

Table 1.4.6 Deck girders, transverses and hatch beams

Location and arrangements	Modulus, in cm^3	Inertia, in cm^4
(1) Girders and transverses in way of dry cargo spaces and clear of hatch openings: (a) supporting up to three point loads	*See also* Note Z to be determined from calculations using Note and stress $\frac{123,5}{k}$ N/mm^2 $\left(\frac{12,6}{k}\right.$ kgf/mm$^2\left.\right)$ and assuming fixed ends	$I = \frac{1,85}{k} l_e Z$
(b) supporting four or more point loads or a uniformly distributed load	$Z = 4,75k\, S\, H_g\, l_e^2$	
(2) Hatch side girders in way of dry cargo spaces at weather decks (with deep coamings): (a) supporting up to three point loads	Z to be determined from calculations using Note and stress $\frac{100,4}{k}$ N/mm^2 $\left(\frac{10,25}{k}\right.$ kgf/mm$^2\left.\right)$ and assuming fixed ends	$I = \frac{2,3}{k} l_e Z$
(b) supporting four or more point loads or a uniformly distributed load	$Z = 5,85k\, S_1\, H_g\, l_e^2$	
(3) Hatch side girders in way of dry cargo spaces at lower decks (without deep coamings): (a) supporting up to three point loads	Z to be determined from calculations using stress $\frac{112,5}{k}$ N/mm^2 $\left(\frac{11,5}{k}\right.$ kgf/mm$^2\left.\right)$	$I = \frac{1,85}{k} l_e Z$
(b) supporting four or more point loads or a uniformly distributed load	$Z = 5,20k\, S_1\, H_g\, l_e^2$	
(4) Hatch end beams in way of dry cargo spaces and supported at centreline, *see* Fig. 1.4.1: (a) In association with longitudinal framing when there is no transverse between the hatch end beam and adjacent transverse bulkhead or equivalent supporting structure	$Z = 19k\, K_1\, H_g\, l_e\, S_1\, l_1 + 2,37k\, S_e H_g\, l_e^2$	
(b) In association with longitudinal framing where there is one or more transverse between the hatch end beam and adjacent transverse bulkhead or equivalent supporting structure	$Z = 19k\, K_1\, H_g\, l_e\, (S_1\, l_1 + S_2\, l_2)$	$I = \frac{2,8}{k} l_e Z$
(c) In association with transverse framing when the hatch end beam supports the hatch side girder and in line girder only	$Z = 19k\, K_1\, H_g\, l_e\, (S_1\, l_1 + S_3\, l_3)$	
(d) In association with transverse framing when the hatch end beam supports the hatch side girder, an in line girder and an additional girder between the hatch side and the centreline	$Z = 19k\, H_g\, l_e\, (K_1\, (S_1\, l_1 + S_4\, l_4) + K_2\, S_5\, l_5)$	
(5) Girders and transverses in way of the crown or bottom of a tank	$Z = 11,7\rho\, k\, h_4\, S\, l_e^2$	$I = \frac{2,8}{k} l_e Z$

Symbols

S, l_e, k, ρ as defined in 1.5.1

h_4 = tank head, in metres, as defined in Pt 3, Ch 3,5

l_1, l_2, l_3, l_4, l_5, in metres, as indicated in Fig. 1.4.1

B_h = breadth of hatchway, in metres, as used to determine K_1

H_g = weather head h_1, or cargo head h_2, or accommodation head h_3, in metres, as defined in Pt 3, Ch 3,5, whichever is applicable

K_1, K_2 = factors, dependent on the girder arrangements, as follows:

$\frac{B_h}{2l_e}$ or $\frac{X}{l_e}$	K_1 or K_2
0,2	0,143
0,3	0,177
0,4	0,191
0,5	0,187
0,6	0,179
0,7	0,169
0,8	0,141
0,9	0,085
1,0	0,000

S_e, S_1, S_2, S_3, S_4, S_5, in metres as indicated in Fig. 1.4.1

X = distance, in metres, from centreline of ship to an additional girder, if fitted, as shown in Fig. 1.4.1, as used to determine K_2

NOTE
In single deck ships the section modulus of deck transverses is to be increased by 15 per cent.

Table 1.4.7 Pillars

Symbols	Parameter	Requirement
b = breadth of side of a hollow rectangular pillar or breadth of flange or web of a built or rolled section, in mm d_p = mean diameter of tubular pillars, in mm k = local scantling higher tensile steel factor, *see* Pt 3, Ch 2,1.2.3, but not less than 0,72 l = overall length of pillar, in metres l_e = effective length of pillar, in metres, and is taken as: for hold pillars 0,65l for 'tween deck pillars 0,80l l_p = distance, in metres, between centres of the two adjacent spans of girder, or transverse, supported by the pillar r = least radius of gyration of pillar cross-section, in mm, and may be taken as: $r = 10\sqrt{\frac{I}{A_p}}$ mm A_p = cross-sectional area of pillar, in cm^2 C, S as defined in 1.5.1 H_g as defined in Table 1.4.6 I = least moment of inertia of cross-section, in cm^4 P = load, in kN (tonne-f), supported by the pillar and is to be taken as $\frac{9{,}81\, SH_g\, l_p}{C} + P_a \left(\frac{SH_g\, l_p}{C} + P_a\right)$ but not less than 19,62 kN (2 tonne-f) P_a = load, in kN (tonne-f), from pillar or pillars above (zero if no pillars over)	(1) Cross-sectional area of all types of pillar	$A_p = \frac{k\,P}{12{,}36 - 51{,}5\,\frac{l_e}{r\sqrt{k}}}$ cm^2 $\left(A_p = \frac{k\,P}{1{,}26 - 5{,}25\,\frac{l_e}{r\sqrt{k}}}\right.$ cm$^2\left.\right)$ *See* Note
	(2) Minimum wall thickness of tubular pillars	The greater of the following: (a) $t = \frac{P}{d_p\left(0{,}392 - 1{,}53\frac{l_e}{r}\right)}$ mm (a) $\left(t = \frac{P}{d_p\left(0{,}04 - 0{,}156\frac{l_e}{r}\right)}\right)$ mm (b) $t = \frac{d_p}{40}$ mm but not to be less than t = 5,5 mm where L < 90 m, or = 7,5 mm where $L \geq 90$ m
	(3) Minimum wall thickness of hollow rectangular pillars or web plate thickness of I or channel sections	The lesser of (b) and (c), but not to be less than (a): (a) $t = \frac{P}{b\left(0{,}5 - 1{,}95\frac{l_e}{r}\right)}$ mm (a) $\left(t = \frac{P}{b\left(0{,}05 - 0{,}2\frac{l_e}{r}\right)}\right)$ mm (b) $t = \frac{br}{600\, l_e}$ mm (c) $t = \frac{b}{55}$ mm but to be not less than t = 5,5 mm where L < 90 m, or = 7,5 mm where $L \geq 90$ m
	(4) Minimum thickness of flanges of angle or channel sections	The lesser of the following: (a) $t_f = \frac{br}{200\, l_e}$ mm (b) $t_f = \frac{b}{18}$ mm
	(5) Minimum thickness of flanges of built or rolled I sections	The lesser of the following: (a) $t_f = \frac{br}{400\, l_e}$ mm (b) $t_f = \frac{b}{36}$ mm

NOTE

As a first approximation A_p may be taken as $\frac{k\,P}{9{,}32}\left(\frac{k\,P}{0{,}95}\right)$ and the radius of gyration estimated for a suitable section having this area.

If the area calculated using this radius of gyration differs by more than 10 per cent from the first approximation, a further calculation using the radius of gyration corresponding to the mean area of the first and second approximation is to be made.

Table 1.4.8 Non-watertight pillar bulkheads

Symbols	Parameter	Requirement	
		Ships with $L < 90$ m	Ships with $L \geq 90$ m
d_w, t_p, b, c as defined in Pt 3, Ch 3,3 r = radius of gyration, in mm, of stiffener and attached plating $= 10\sqrt{\frac{I}{A}}$ mm for rolled, built or swedged stiffeners $= d_w\sqrt{\frac{3b + c}{12\,(b + c)}}$ mm for symmetrical corrugation I = moment of inertia, in cm^4, of stiffener and attached plating s = spacing of stiffeners, in mm A = cross-sectional area, in cm^2, of stiffener and attached plating $A_1 = \frac{P}{12{,}36 - 51{,}5\frac{l_e}{r}}$ cm^2 $\left(A_1 = \frac{P}{1{,}26 - 5{,}25\frac{l_e}{r}}\right)$ cm^2 As a first approximation A_1 may be taken as $\frac{P}{9{,}32}\left(\frac{P}{0{,}95}\right)$ $A_2 = \frac{P}{4{,}9 - 14{,}7\frac{l_e}{r}}$ cm^2 $\left(A_2 = \frac{P}{0{,}5 - 1{,}5\frac{l_e}{r}}\right)$ cm^2 As a first approximation A_2 may be taken as $\frac{P}{3{,}92}\left(\frac{P}{0{,}4}\right)$ P, l_e as defined in Table 1.4.7 $\lambda = \frac{b}{c}$	(1) Minimum thickness of bulkhead plating	5,5 mm in holds and 'tween decks	7,5 mm in holds
			6,5 mm in 'tween decks
	(2) Maximum stiffener spacing	1500 mm	1500 mm
	(3) Minimum depth of stiffeners or corrugations	100 mm in holds	150 mm in holds
		75 mm in 'tween decks	100 mm in 'tween decks
	(4) Cross-sectional area (including plating) for rolled, built or swedged stiffeners supporting beams, longitudinals, girders or transverses	(a) Where $\frac{s}{t} \leq 80$	$A = A_1$
		(b) Where $\frac{s}{t} \geq 120$	$A = A_2$
		(c) Where $80 < \frac{s}{t} < 120$	A is obtained by interpolation between A_1 and A_2
	(5) Cross-sectional area (including plating) for symmetrical corrugation	(a) Where $\frac{b}{t_p} \leq \frac{750\lambda l_e}{(\lambda + 0{,}25)\,r}$	$A = A_1$
		(b) Where $\frac{b}{t_p} > \frac{750\lambda l_e}{(\lambda + 0{,}25)\,r}$	$A = A_2$

4.5.5 Openings in the strength deck outside the line of hatch openings having a stress concentration factor in excess of 2,4 will require edge reinforcements in the form of a spigot of adequate dimensions, but alternative arrangements will be considered. The area of any edge reinforcement which may be required is not to be taken into account in determining the required sectional area of compensation for the opening. Alternatively, the shape of the opening is to be such that a stress concentration factor of 2,4 is not exceeded. In this respect, reinforcement will not in general, be required in way of:

(a) elliptical openings having their major axis fore and aft and a ratio of length to breadth not less than 2 to 1, or

(b) openings of other shapes provided that it has been shown by suitable tests that the stress concentration factor does not exceed 2,4.

Table 1.4.9 Cantilever beams (*see continuation*)

Location and supporting arrangements	Required modulus, in cm^3, *see* Notes	
	Cantilever beam	Supporting frame
(1) Any position – no support from end girders	$Z_o = 8{,}67kM_o$ ($Z_o = 85kM_o$)	$Z_v = \frac{v}{H_1}\left(\frac{fZ_o}{u} - kZ_t\right)$
(2) At hatch side – uniform loading, partial support received from hatch side girder, *see* Fig. 1.4.3: (a) Hatch side girder supported by Rule hatch end beams or pillars at hatch corners (b) Hatch side girder supported by end bulkheads of hold – no Rule hatch end beams or pillars (c) No transverse bulkheads between hatchways, no Rule hatch end beams or pillars, *see* Notes (d) At hatch side – concentrated loading	$Z_u = 0{,}9Z_o - kG$ Z_u as in (a) or the following formula, whichever is the greater: $\left(\frac{n+1}{n}\right)\left(0{,}45\left(1+\frac{1}{\beta}\right)Z_o - k\beta G - (1-\beta)kE\right)$ Z_u as in (a) or the following formula, whichever is the greater: $\left(\frac{n+1}{n}\right)\left(\frac{Z_o}{\beta} - 0{,}5kE\right)$ Z_u as in (a), (b) or (c), whichever is applicable, or as the following formula, whichever is the greater: $Z_o - kG_1$	$Z_v = \frac{v}{H_1}\left(\frac{fZ_u}{u} - kZ_t\right)$
Case (1) or (2)	Required inertia, in cm^4	
	$I_u = \frac{9u}{k}Z_u$	—

NOTES

1. Where a transverse bulkhead is fitted at only one end of a hatchway the section modulus of cantilever beams is to be a mean of the values obtained from (2)(b) and (2)(c).
2. Where only cantilevers in the length of a hatchway consist of two or three close together at the mid-length of hatchway, their modulus is to be determined by calculating the modulus of a single cantilever at mid-length and dividing this by the actual number of cantilevers.
3. If a negative value is obtained for the required section modulus, cantilevers are not necessary for the arrangement considered.
4. In calculating the actual section modulus of a cantilever or supporting frame, the effective area of attached plating is to be as given in Pt 3, Ch 3,3. Intermediate beams or frames within the effective breadth may be included in the calculation.
5. Rule hatch end beams are those with scantlings determined from Table 1.4.6, assuming that the hatch side girder has a span between hatch end beams.
6. The section modulus of cantilever beams is to be not less than that determined from Table 1.4.5 for beams in the same position.
7. The section modulus of side frames, pillars or pillar bulkhead stiffeners supporting cantilevers is to be not less than that required for ordinary side frames. pillars or pillar bulkhead stiffeners, as determined from the appropriate Sections of the Rules.
8. The scantlings of the cantilever bracket within the shaded area shown in Fig. 1.4.2 are to be as follows:
   (a) Where tripping brackets are not fitted:
   $t = (0{,}0075d_c + 5)\sqrt{k}$ mm
   $A_f = \left(\frac{27Z_d}{e}\left(1 - \frac{e}{1420f}\right) - \frac{et}{300}\right)k$ cm^2
   (b) Where tripping brackets are fitted at the positions indicated in Fig. 1.4.2:
   $t = (0{,}0075d_c + 5)\sqrt{k}$ mm
   $A_f = \left(\frac{20Z_d}{e}\left(1 - \frac{e}{1420f}\right) - \frac{et}{200}\right)k$ cm^2
   In general the radius at the throat of the cantilever bracket is to be not less than d_c.
9. The cantilever beam and supporting frame face plates may be gradually tapered from the limits of the shaded area shown in Fig. 1.4.2. The web depth of the supporting frame may be tapered to a minimum of $0{,}5d_f$ at the base.
10. Where the web thickness of cantilevers or supporting frames is less than $\frac{d_w}{60\sqrt{k}}$ transverse web stiffeners are to be fitted spaced approximately $1{,}5d_w$ apart. In no case is the web thickness outside the limits of the cantilever brackets to be less than $\frac{d_w}{85\sqrt{k}}$
    Where stiffeners are fitted parallel to the face plates, the stiffening arrangements will be specially considered.

Table 1.4.9 Cantilever beams (*conclusion*)

Symbols

f = overall length of cantilever, in metres

k = higher tensile steel factor as defined in 1.5.1

l_b = distance, in metres, between transverse bulkheads, *see* Fig. 1.4.4. Where there is no bulkhead midway between hatchways, l_b is to be measured to a point midway between hatchways

l_h = length of hatchway, in metres, *see* Fig. 1.4.4

C = cargo stowage rate in m^3/tonne as defined in Pt 3, Ch 3,5, and is to be taken as 1,39 m^3/tonne unless specified otherwise

Z_a = section modulus, in cm^3, of hatch side girder which is to be not less than that calculated from Table 1.4.6, taking the span between cantilevers

Z_b = mean of section moduli, in cm^3, of longitudinal girders in line with hatch side girder (Z_b is to be taken not greater than Z_a)

$Z_d = \dfrac{fZ_u}{u}$

Z_o = section modulus, in cm^3, of cantilever beam, not supported by end girder, at distance u from outer end

Z_t = section modulus, in cm^3, of frame or stiffener above cantilever, *see* Fig. 1.4.2. (Where there is no frame or stiffener above cantilever $Z_t = 0$)

Z_u = section modulus, in cm^3, of cantilever beam, partially supported by hatch side girder at end, at distance u from outer end

Z_v = section modulus, in cm^3, of supporting frame, at distance v from lower end

Z_1, Z_2, Z_3 = mean of section moduli, in cm^3, of hatch end beams calculated for the positions shown in Fig. 1.4.3. Z_2 is to be taken as the smaller modulus of the two sections adjacent to the hatch side

$\beta = \dfrac{l_h}{l_b}$

E is determined as follows:

When centreline bulkheads or pillars are fitted:

$$E = \frac{4}{n+1}\left((Z_1 + Z_2) + \frac{2u}{B_h}(Z_2 + Z_3)\right)$$

Where there is no centreline support:

d_c = web depth of cantilever, at root of bracket, in mm, *see* Fig. 1.4.2

d_f = web depth of frame at root of bracket, in mm, *see* Fig. 1.4.2

d_w = web depth of cantilever or frame, in mm

e = web depth, in mm, as shown in Fig. 1.4.2

n = number of cantilevers between the hatch end beams

t = thickness of cantilever bracket, in mm

u, v = lever arms, in metres, as shown in Fig. 1.4.2

A_f = sectional area, in cm^2, of cantilever bracket face plate

B_h = breadth of hatch, in metres, *see* Fig. 1.4.4

$$E = \frac{4}{n+1}(Z_1 + Z_2)$$

$$G = \frac{7u}{(n+1)l_h}(Z_a + Z_b)$$

$$G_1 = \frac{3{,}5uZ_a}{S_c}$$

H_1, H_2, H_3 = mean height of hold or 'tween deck, in metres, as shown in Fig. 1.4.2. At weather decks, H_2 and H_3 are to be taken equivalent to the weather head h_1 as defined in Pt 3, Ch 3,5

M_o = bending moment, in kN m (tonne-f m), on the cantilever beam due to the load supported by a single cantilever. This bending moment is to be calculated about an axis at a distance u from the end. For hatch side cantilevers with uniformly distributed loading this will equal

$$\frac{4{,}9S_c u}{C}(H_2B_h + H_3 u)$$

$$\left(\frac{0{,}5S_c u}{C}(H_2B_h + H_3 u)\right)$$

S_c = spacing of cantilevers, in metres, *see* Fig. 1.4.4

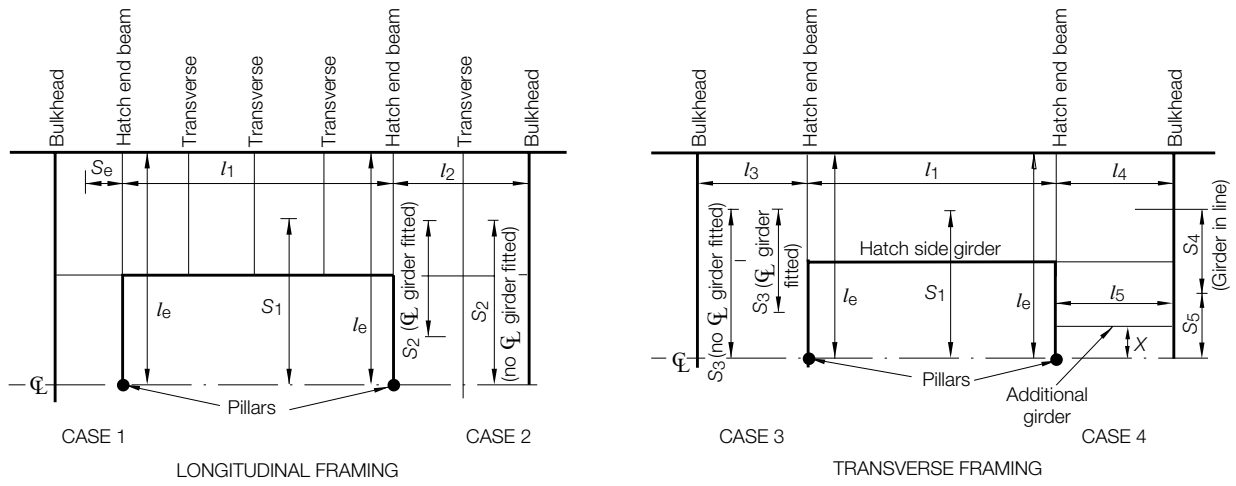

Fig. 1.4.1 Hatch end beam arrangements

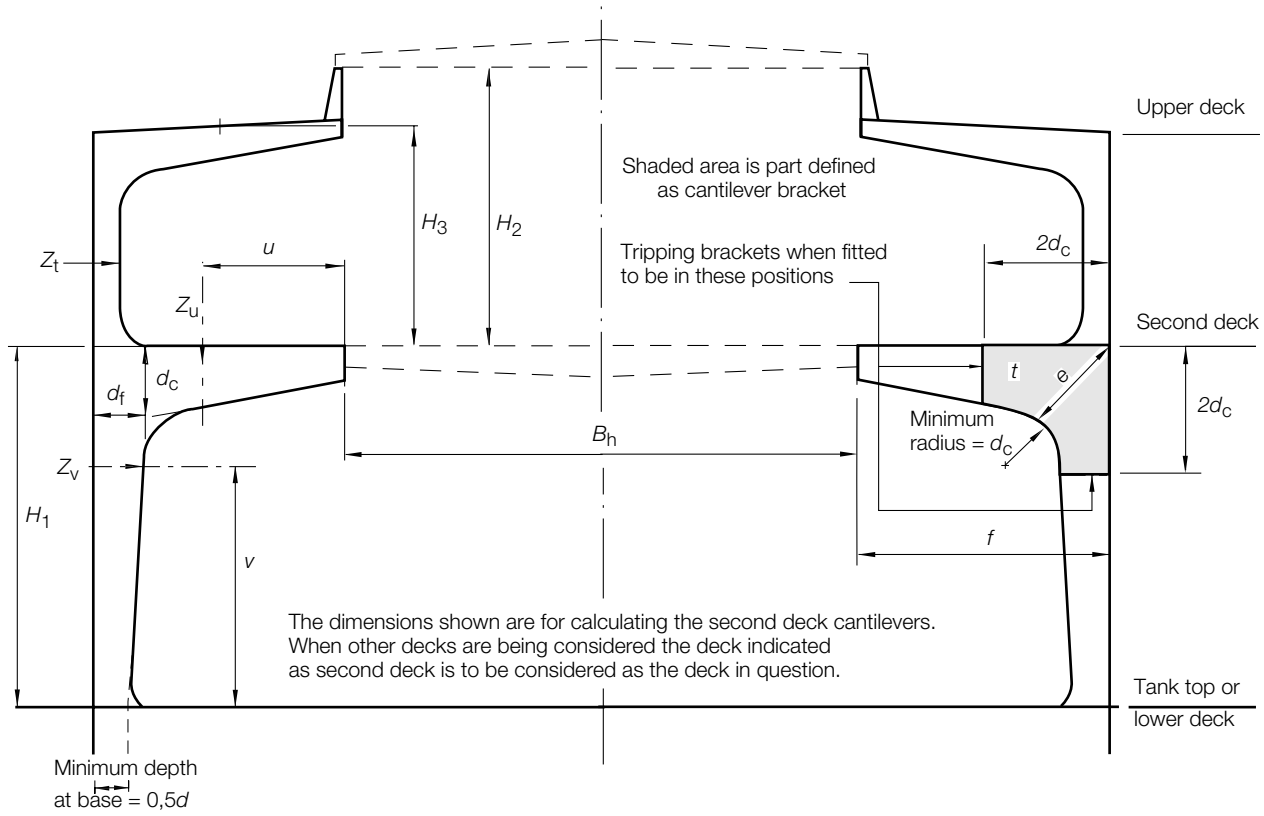

Fig. 1.4.2 Deck conti levers

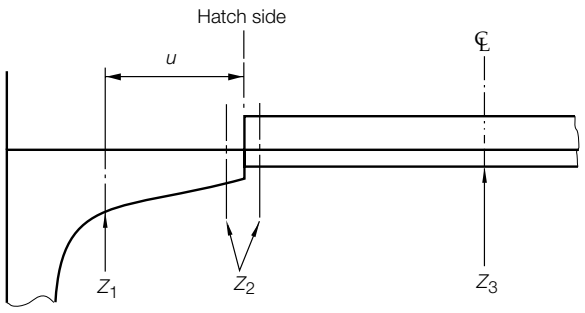

Fig. 1.4.3 Section moduli of hatch end beams

4.5.6 Lower deck openings should be kept clear of main hatch corners and the areas of high stress, so far as possible. Compensation will not, in general, be required unless the total width of openings in any frame space, or between any two transverses, exceeds 15*k* per cent of the original effective plating width. The requirements of 4.5.4 also apply to lower deck openings except that:

(a) the thickness of inserts, if required, for the second deck hatch corners is to be 2,5 mm greater than the deck thickness,

(b) inserts will not generally be required for hatch corners on third decks, platform decks and below, and

(c) reinforcement will not generally be required for circular openings, provided that the plate panels in which they are situated are otherwise adequately stiffened against compression and shear buckling.

4.5.7 All openings are to be adequately framed; attention is to be paid to structural continuity, and abrupt changes of shape, section or plate thickness are to be avoided. Arrangements in way of corners and openings are to be such as to minimize the creation of stress concentrations. Where a deck longitudinal is cut, compensation is to be arranged to ensure full continuity of strength.

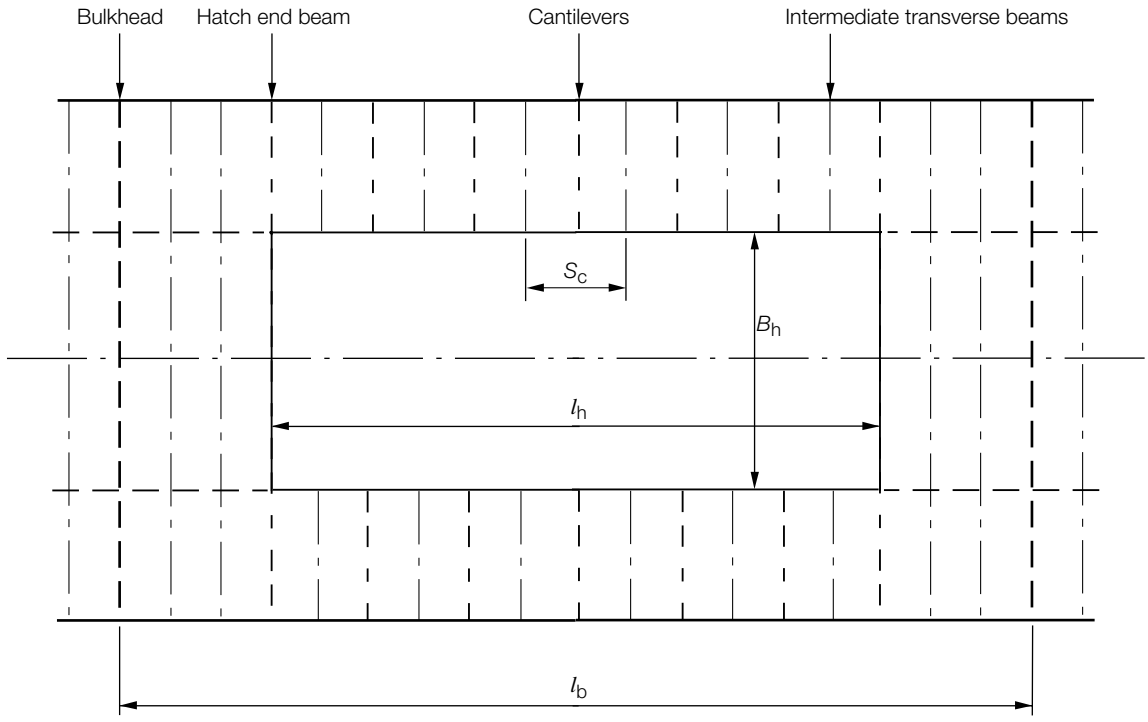

Fig. 1.4.4 Deck supporting structure

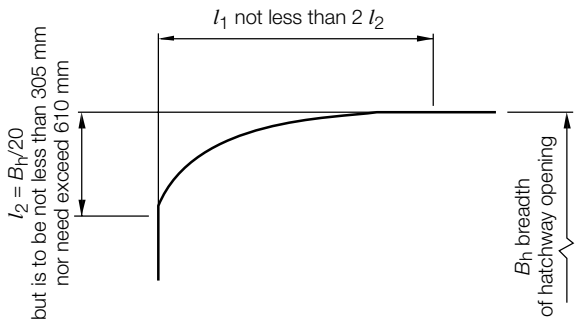

Fig. 1.4.5 Elliptical and parabolic corners

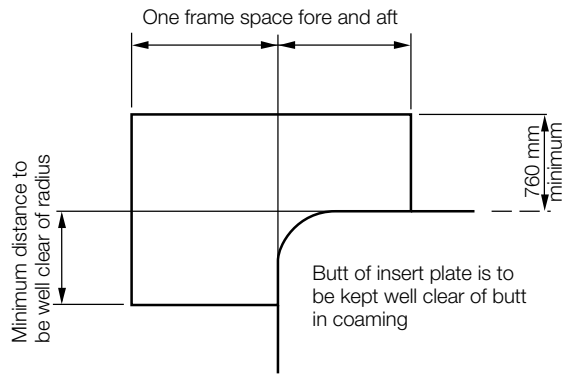

Fig. 1.4.6 Insert plates for large openings

■ *Section 5* Shell envelope plating

5.1 General

5.1.1 Requirements are given in this Section for longitudinal or transversely framed shell plating, and attention is drawn to the requirements of 6.1.1. In ships with a transversely framed bottom construction, the bottom shell plating is, in general, to be reinforced with additional continuous, or intercostal, longitudinal stiffeners, *see also* 7.1.2. Alternative arrangements will be considered.

5.1.2 For ships intended to load or unload while aground, *see* Pt 3, Ch 9,13.

5.2 Keel

5.2.1 The cross-sectional area and thickness of bar keels, and the width and thickness of plate keels, are to comply with the requirements of Table 1.5.1. Forged or rolled bar keels are also to comply with the material requirements of Chapter 3 of the *Rules for the Manufacture, Testing and Certification of Materials* (hereinafter referred to as the Rules for Materials).

Table 1.5.1 Bar and plate keels

Item and parameter	Requirement
(1) Bar keels:	
Cross-sectional area	$A = (1{,}8L - 16)$ cm^2
Thickness	$t = (0{,}6L + 8)$ mm
(2) Plate keels:	
Breadth	$b = 70B$ mm but need not exceed 1800 mm and is not to be less than 750 mm
Thickness	$t = (t_1 + 2)$ mm where t_1 is as in location (1) in Table 1.5.2, using the spacing in way of the keel plate t is to be taken not less than the adjacent bottom shell thickness
Symbols	
L, B as defined in 1.5.1 b = breadth of keel, in mm t = thickness of keel, in mm A = cross-sectional area, in cm^2	

5.3 Bottom shell and bilge

5.3.1 In the midship region the thickness of bottom shell plating to the upper turn of bilge is to be that necessary to give the hull section modulus required by Pt 3, Ch 4,5, and is to be not less than the minimum values given by Table 1.5.2.

5.4 Side shell

5.4.1 In the midship region, the thickness of side shell and sheerstrake plating including the sides of bridge superstructures is to be not less than the values given by Table 1.5.3, but may be required to be increased locally on account of high shear forces in accordance with Pt 3, Ch 4,6.

5.4.2 Sea inlets, or other openings, are to have well rounded corners and so far as possible, are to be kept clear of the bilge radius. Openings on, or near to, the bilge radius are to be elliptical. The thickness of sea inlet box plating is to be the same as the adjacent shell, but not less than 12,5 mm and need not exceed 25 mm.

5.4.3 Where a rounded sheerstrake is adopted the radius should, in general, be not less than 15 times the thickness.

5.4.4 The sheerstrake thickness is to be increased by 20 per cent at the ends of a bridge superstructure extending out to the ship's side. In the case of a bridge superstructure exceeding 0,15L, the side plating at the ends of the superstructure is also to be increased by 25 per cent and tapered gradually into the upper deck sheerstrake.

5.4.5 In general, compensation will not be required for holes in the sheerstrake which are clear of the gunwale or any deck openings situated outside the line of the main hatchways and whose depth does not exceed 20 per cent of the depth of the sheerstrake or 380 mm, whichever is the lesser. Openings are not to be cut in a rounded gunwale. Cargo door openings are to have well rounded corners, and the proposed compensation for the door openings will be individually considered.

Table 1.5.2 Bottom shell and bilge plating

Location	Minimum thickness, in mm, *see also* 5.3.1	
	Longitudinal framing	Transverse framing
(1) Bottom plating, *see* Notes 1 and 2	The greater of the following: (a) $t = 0{,}001 s_1 (0{,}043 L_1 + 10) \sqrt{\frac{F_B}{k_L}}$ (*see* Note 4) (b) $t = 0{,}0052 s_1 \sqrt{\frac{h_{T2} k}{1{,}8 - F_B}}$	The greater of the following: (a) $t = 0{,}001 s_1 f_1 (0{,}056 L_1 + 16{,}7) \sqrt{\frac{F_B}{k_L}}$ (*see* Note 4) (b) $t = 0{,}0063 s_1 \sqrt{\frac{h_{T2} k}{1{,}8 - F_B}}$
(2) Bilge plating – where framed, *see* Notes 1 and 2	t as for (1)	t as for (1)
(3) Bilge plating – where unframed, *see* Note 3	Provided that transverses or adequate bilge brackets are spaced not more than $\frac{8t^2}{DR_B} \sqrt{\frac{t}{R_B}} \times 10^6$ mm apart $t = \frac{R_B F_B}{165 k_L}$ but is to be not less than the adjacent bottom plating	

Symbols

L, D, T, s, S, k_L, k as defined in 1.5.1

C_W is as defined in 1.5.1. Where $L > 227$ m, C_W is not to be taken less than 6,446 m

$f_1 = \frac{1}{1 + \left(\frac{s}{1000S}\right)^2}$

$h_{T2} = (T + 0{,}5\, C_W)$, in metres but need not be taken greater than $1{,}2T$ m

$s_1 = s$, but is not to be taken less than the smaller of $470 + \frac{L}{0{,}6}$ mm or 700 mm

F_B = as defined in Pt 3, Ch 4,5.6

L_1 = L but need not be taken greater than 190 m

R_B = bilge radius, in mm, *see* Note 3

NOTES

1. The thickness derived in accordance with (1) is also to satisfy the buckling requirements of Pt 3, Ch 4,7.
2. The thickness of bottom shell or bilge plating is to be not less than the basic shell end thickness for taper as given in Pt 3, Ch 5,3 and Ch 6,3.
3. Where longitudinally framed and the lowest side longitudinal lies a distance a mm above the uppermost turn of bilge and/or the outermost bottom longitudinal lies a distance b inboard of the lower turn of bilge, the bilge radius is to be taken as $R_B + \frac{(a + b)}{2}$ mm.

   In no case is a or b to be greater than s.
4. Where separate maximum sagging and hogging still water bending moments are assigned, F_B may be based on the hogging moment.

Table 1.5.3 Side shell plating

Location	Thickness, in mm, *see also* 5.4.1	
	Longitudinal framing	Transverse framing
(1) Side shell clear of sheerstrake, *see* Notes 1, 2, 4 and 5	(a) Above $\frac{D}{2}$ from base: The greater of the following: (i) $t = 0{,}001 s_1 (0{,}059 L_1 + 7) \sqrt{\frac{F_D}{k_L}}$ (ii) $t = 0{,}0042 s_1 \sqrt{h_{T1} k}$	(a) Within $\frac{D}{4}$ from the gunwale: The greater of the following: (i) $t = 0{,}00085 s_1 f_1 (0{,}083 L_1 + 10) \sqrt{\frac{F_D}{k_L}}$ (ii) $t = 0{,}0042 s_1 \sqrt{h_{T1} k}$
	(b) At upper turn of bilge, *see* Note 3: The greater of the following: (i) $t = 0{,}001 s_1 (0{,}059 L_1 + 7) \sqrt{\frac{F_B}{k_L}}$ (ii) $t = 0{,}0054 s_1 \sqrt{\frac{h_{T2} k}{2 - F_B}}$	(b) Within $\frac{D}{4}$ from mid-depth: The greater of the following: (i) $t = 0{,}001 s_1 (0{,}059 L_1 + 7) \sqrt{\frac{F_M}{k_L}}$ (ii) $t = 0{,}0051 s_1 \sqrt{h_{T1} k}$
	(c) Between upper turn of bilge and $\frac{D}{2}$ from base: The greater of the following: (i) t from (b)(i) (ii) t from interpolation between (a)(ii) and (b)(ii)	(c) Within $\frac{D}{4}$ from base (excluding bilge plating), *see* Note 3: The greater of the following: (i) $t = 0{,}00085 s_1 f_1 (0{,}083 L_1 + 10) \sqrt{\frac{F_B}{k_L}}$ (ii) $t = 0{,}0056 s_1 \sqrt{\frac{h_{T2} k}{1{,}8 - F_B}}$
(2) Sheerstrake, *see* Notes 1, 2 and 5	The greater of the following: (i) $t = 0{,}001 s_1 (0{,}059 L_1 + 7) \sqrt{\frac{F_D}{k_L}}$ (ii) $t = 0{,}00083 s_1 \sqrt{Lk} + 2{,}5$ but t is to be not less than the thickness of the adjacent side plating	The greater of the following: (i) $t = 0{,}001 s_1 f_1 (0{,}083 L_1 + 10) \sqrt{\frac{F_D}{k_L}}$ (ii) $t = 0{,}001 s_1 \sqrt{Lk} + 2{,}5$ but t is to be not less than the thickness of the adjacent side plating

Symbols

L, D, T, S, s, k_L, k, as defined in 1.5.1

C_W is as defined in 1.5.1. Where $L > 227$ m, C_W is not to be taken less than 6,446 m

$$f_1 = \frac{1}{1 + \left(\frac{s}{1000S}\right)^2}$$

h_{T1} = $T + C_W$ m but need not be taken greater than $1{,}36T$

h_{T2} = $T + 0{,}5C_W$ m but need not be taken greater than $1{,}2T$

s_1 = s, but is not to be taken less than the smaller of

$470 + \frac{L}{0{,}6}$ mm or 700 mm

F_D, F_B = as defined in Pt 3, Ch 4,5.6

F_M = the greater of F_D or F_B

L_1 = L, but need not be taken greater than 190 m

NOTES

1. The thickness is also to satisfy the buckling requirements of Pt 3, Ch 4,5.6.
2. The thickness of side shell or sheerstrake is to be not less than the basic shell end thickness for taper, as given in Pt 3, Ch 5,3 and Ch 6,3. The width of the sheerstrake (where of different thickness from the side shell) is to be not less than that required by Table 2.2.1 in Pt 3, Ch 2.
3. The thickness of side shell need not exceed that determined from Table 1.5.2 for bottom shell, but using the spacing of side frames or longitudinals.
4. Outside the Rule minimum region of higher tensile steel as defined in Pt 3, Ch 3,2.6.1 the value of k_L may be taken as 1,0.
5. For the expressions contained in (i), where separate maximum sagging and hogging still water bending moments are assigned, F_D may be based on the sagging moment and F_B on the hogging moment.

Section 6
Shell envelope framing

6.1 General

6.1.1 Longitudinal framing is, in general, to be adopted at the bottom, but special consideration will be given to proposals for transverse framing in this region. Transverse or longitudinal framing can be adopted for the side shell. Requirements are given in this Section for longitudinal and transverse framing systems.

6.1.2 End connections of longitudinals to bulkheads are to provide adequate fixity and, so far as practicable, direct continuity of longitudinal strength. Where *L* exceeds 215 m, the bottom longitudinals are to be continuous in way of both watertight and non-watertight floors, but alternative arrangements will be considered. Higher tensile steel longitudinals within 10 per cent of the ship's depth at the bottom and deck are to be continuous irrespective of the ship length, *see also* Pt 3, Ch 10,5.2.

6.1.3 Stiffeners and brackets on side transverses, where fitted on one side and connected to higher tensile steel longitudinals between the base line and $0{,}8D_2$ above the base line, are to have their heels well radiused to reduce stress concentrations. Where a symmetrical arrangement is fitted, i.e. bracket or stiffening on both sides, and it is connected to higher tensile steel longitudinals, the toes of the stiffeners or brackets are to be well radiused. Alternative arrangements will be considered if supported by appropriate direct calculations, *see also* Pt 3, Ch 10,5.2.

6.1.4 Where higher tensile steel side longitudinals pass through transverse bulkheads in the cargo area, well radiused brackets of the same material are to be fitted on both the fore and aft side of the connection between the upper turn of bilge and $0{,}8D_2$ above the base line. Particular attention should be given to ensuring the alignment of these brackets. Alternative arrangements will be considered if supported by appropriate direct calculations, *see also* 6.2.3.

6.1.5 For ships intended to load or unload while aground, *see* Pt 3, Ch 9,13.

6.2 Longitudinal stiffening

6.2.1 For non-**CSR** tankers and bulk carriers (*see* Pt 1, Ch 2,2.3) the scantlings of bottom and side longitudinals in the midship region are to comply with the requirements given in Table 1.6.1(b). In general other ships are to comply with Table 1.6.1(a).

6.2.2 The lateral and torsional stability of longitudinals together with web and flange buckling criteria are to be verified in accordance with Pt 3, Ch 4,7.

6.2.3 Where higher tensile steel asymmetrical sections are adopted in double bottom tanks which are interconnected with double skin side tanks or combined hopper and topside tanks the requirements of 6.1.3 and 6.1.4 are to be complied with regarding arrangements to reduce stress concentrations. Alternatively, it is recommended that bulb plate or symmetrical sections are adopted.

6.3 Transverse stiffening

6.3.1 The scantlings of main and 'tween deck frames, and bottom frames in way of bracket floors, in the midship region are to comply with the requirements given in Table 1.6.2.

6.3.2 The scantlings of main frames are normally to be based on Rule standard brackets at top and bottom, whilst the scantlings of 'tween deck frames are normally to be based on a Rule standard bracket at the top only.

6.3.3 End connections of transverse main and 'tween deck frames are to be in accordance with Pt 3, Ch 10,3.

6.4 Primary supporting structure

6.4.1 Side transverses supporting longitudinal stiffening, and webs and stringers supporting transverse side stiffening, are to comply with the requirements of Table 1.6.3.

6.4.2 Side transverses are to be spaced not more than 3,8 m apart when the length, *L*, is less than 100 m and (0,006*L* + 3,2) m apart where *L* is greater than 100 m.

Table 1.6.1(a) Shell framing (longitudinal)

Location	Modulus, in cm^3
(1) Side longitudinals in way of dry spaces, including double skin construction, *see* Note 2	The lesser of the following: (a) $Z = 0{,}056\, skh_{T1}\, l_e^2\, F_1\, F_s$ (b) Z from (3)(a) evaluated using s, k and l_e for the longitudinal under consideration and the remaining parameters evaluated at the base line
(2) Side longitudinals in way of double skin tanks or deep tanks, *see* Note 2	The greater of the following: (a) Z as from (1) (b) As required by Ch 1,9 for deep tanks
(3) Bottom and bilge longitudinals, *see* Notes 1, 2, 3 and 4	The greater of the following: (a) $Z = \gamma\, s\, k\, h_{T2}\, l_e^2\, F_1$ (b) $Z = \gamma\, s\, k\, h_{T3}\, l_e^2\, F_1\, F_{sb}$

Symbols

L, D, T, s, k, k_L, ρ as defined in 1.5.1

l_e = as defined in 1.5.1, but is not to be taken less than 1,5 m except in way of the centre girder brackets required by 8.5.3 where a minimum span of 1,25 m may be used

l_{e1} = l_e in metres, but is not to be taken less than 2,5 m and need not be taken greater than 5,0 m

$$c_1 = \frac{60}{225 - 165F_D} \text{ at deck}$$
$$= 1{,}0 \text{ at } \frac{D_2}{2}$$
$$= \frac{75}{225 - 150F_B} \text{ at base line}$$
intermediate values by interpolation

D_1 = D_2, in metres, but is not to be taken less than 10 and need not be taken greater than 16

D_2 = D, in metres, but need not be taken greater than $1{,}6T$

F_B, F_D as defined in Pt 3, Ch 4,5.6

$$F_1 = \frac{D_2\, c_1}{4D_2 + 20h_5} \text{ for side longitudinals above } \frac{D_2}{2}$$
$$= \frac{D_2\, c_1}{25D_2 - 20h_5} \text{ for side longitudinals below } \frac{D_2}{2} \text{ and bottom longitudinals}$$
minimum $F_1 = 0{,}14$

L_1 = L but need not be taken greater than 190 m

F_s is a fatigue factor for side longitudinals to be taken as follows:

(a) For built sections and rolled angle bars

$$F_s = \frac{1{,}1}{k}\left[1 - \frac{2b_{f1}}{b_f}(1 - k)\right] \text{ at } 0{,}6D_2 \text{ above the base line}$$
$$= 1{,}0 \text{ at } D_2 \text{ and above, and } F_{sb} \text{ at the base line intermediate values by linear interpolation}$$

(b) For flat bars and bulb plates $\frac{b_{f1}}{b_f}$ may be taken as 0,5

F_{sb} is a fatigue factor for bottom longitudinals = 0,5 (1 + F_s at $0{,}6D_2$) where

b_{f1} = the minimum distance, in mm, from the edge of the face plate of the side longitudinal under consideration to the centre of the web plate, *see* Fig. 9.5.1 in Chapter 9

h_{T1} = $C_W\left(1 - \frac{h_6}{D_2 - T}\right)F_\lambda$, in metres, for longitudinals above the waterline, at draught T, where $C_W\left(1 - \frac{h_6}{D_2 - T}\right)$ is not to be taken less than $\frac{L_1}{56}$ m for Type 'B-60' ships and the greater of $\frac{L_1}{70}$, or 1,20 m for Type 'B' ships

= $\left[h_6 + C_W\left(1 - \frac{h_6}{2T}\right)\right]F_\lambda$, in metres, for longitudinals below the waterline at draught T

h_{T1} need not exceed $0{,}86\left(h_5 + \frac{D_1}{8}\right)$ for $F_1 \le 0{,}14$ and $\left(h_5 + \frac{D_1}{8}\right)$ for $F_1 > 0{,}14$

h_{T2} = $(T + 0{,}5C_W)$, in metres for bottom longitudinals need not be taken greater than $1{,}2T$ m

h_{T3} = $h_4 - 0{,}25T$, in metres

h_4 = load head required by Ch 1,9 for deep tanks

h_5 = vertical distance, in metres, from longitudinal to deck at depth, D_2

h_6 = vertical distance, in metres, from the waterline at draught T to the longitudinal under consideration

b_f = the width of the face plate, in mm, of the side longitudinal under consideration, *see* Fig. 9.5.1 in Chapter 9

C_W = a wave head, in metres = $7{,}71 \times 10^{-2} L e^{-0{,}0044L}$ where e = base of natural logarithms 2,7183

F_λ = 1,0 for $L \le 200$ m
= $[1{,}0 + 0{,}0023(L - 200)]$ for $L > 200$ m

γ = $0{,}002l_{e1} + 0{,}046$

NOTES

1. The buckling requirements of Pt 3, Ch 4,7 are to be complied with. The ratio of the web depth, d_w, to web thickness, t, is to comply with the following requirements:
   (a) Built up profiles and rolled angles:
   $$\frac{d_w}{t} \le 60\sqrt{k_L}$$
   (b) Flat bars:
   $$\frac{d_w}{t} \le 18\sqrt{k_L} \text{ when continuous at bulkheads}$$
   $$\frac{d_w}{t} \le 15\sqrt{k_L} \text{ when non-continuous at bulkheads}$$
2. Where struts are fitted midway between transverses in way of double bottom tanks, or double skin construction, the modulus of the bottom or side longitudinals may be reduced by 50k per cent from that obtained from the locations (1), (2), or (3) as applicable.
3. Where the bilge radius exceeds the Rule height of a double bottom the modulus of the longitudinal above this nominal height is to be derived from the location (1) or (2) as applicable.
4. Where no bilge longitudinals are fitted and bilge brackets are required by location (3) in Table 1.5.2, at least two brackets are to be fitted.

Table 1.6.1(b) Shell framing (longitudinal)

Location	Modulus, in cm^3
(1) Side longitudinals in way of dry spaces, including double skin construction, *see* Note 2	The lesser of the following: (a) $Z = 0{,}056\, skh_{T1}\, l_e^2\, F_1\, F_s$ (b) Z from (3)(a) evaluated using s and l_e for the longitudinal under consideration and the remaining parameters evaluated at the base line
(2) Side longitudinals in way of double skin tanks or deep tanks, *see* Note 2	The greater of the following: (a) Z as from (1) (b) As required by Ch 1,9 for deep tanks, using h_{T3} instead of h_4, but need not exceed Z from (3)(b) evaluated using γ, s and l_e for the longitudinal under consideration and the remaining parameters evaluated at the base line
(3) Bottom and bilge longitudinals, *see* Notes 1, 2, 3 and 4	The greater of the following: (a) $Z = \gamma\, s\, k\, h_{T2}\, l_e^2\, F_1\, F_{sb}$ (b) $Z = \gamma\, s\, k\, h_{T3}\, l_e^2\, F_1\, F_{sb}$

Symbols

L, D, T, s, k, ρ as defined in 1.5.1

l_e = as defined in 1.5.1, but is not to be taken less than 1,5 m except in way of the centre girder brackets required by 8.5.3 where a minimum span of 1,25 m may be used

l_{e1} = l_e in metres, but is not to be taken less than 2,5 m and need not be taken greater than 5,0 m

$$c_1 = \frac{60}{225 - 165F_D} \text{ at deck}$$
$$= 1{,}0 \text{ at } \frac{D_2}{2}$$
$$= \frac{75}{225 - 150F_B} \text{ at base line}$$

intermediate values by interpolation

D_1 = D_2, in metres, but is not to be taken less than 10 and need not be taken greater than 16

D_2 = D, in metres, but need not be taken greater than 1,6T

F_B, F_D as defined in Pt 3, Ch 4,5.6

$$F_1 = \frac{D_2\, c_1}{4D_2 + 20h_5} \text{ for side longitudinals above } \frac{D_2}{2}$$
$$= \frac{D_2\, c_1}{25D_2 - 20h_5} \text{ for side longitudinals below } \frac{D_2}{2}$$

minimum $F_1 = 0{,}14$

and bottom longitudinals

L_1 = L but need not be taken greater than 190 m

F_s is a fatigue factor for side longitudinals to be taken as follows:

(a) For built sections and rolled angle bars

$$F_s = \frac{1{,}1}{k}\left[1 - \frac{2b_{f1}}{b_f}(1 - k)\right] \text{ at } 0{,}6D_2 \text{ above the base line}$$

= 1,0 at D_2 and above, and F_{sb} at the base line intermediate values by linear interpolation

(b) For flat bars and bulb plates $\frac{b_{f1}}{b_f}$ may be taken as 0,5

F_{sb} is a fatigue factor for bottom longitudinals = 0,5 (1 + F_s at 0,6D_2)

where

b_{f1} = the minimum distance, in mm, from the edge of the face plate of the side longitudinal under consideration to the centre of the web plate, *see* Fig. 9.5.1 in Chapter 9

h_{T1} = $C_W\left(1 - \frac{h_6}{D_2 - T}\right)F_\lambda$, in metres, for longitudinals above the waterline, at draught T, where $\left(1 - \frac{h_6}{D_2 - T}\right)$ is not to be taken less than 0,7

= $\left[h_6 + C_W\left(1 - \frac{h_6}{2T}\right)\right] F_\lambda$, in metres, for longitudinals below the waterline at draught T

h_{T1} and h_{T2} need not exceed $0{,}86\left(h_5 + \frac{D_1}{8}\right)$ for $F_1 \le 0{,}14$ and $\left(h_5 + \frac{D_1}{8}\right)$ for $F_1 > 0{,}14$

h_{T2} = $(T + 0{,}5C_W)\, F_\lambda$, in metres for bottom longitudinals

h_{T3} = $h_4 - 0{,}25T$, in metres, at the base line

= h_4, in metres, at and above $T/4$ from the base line, intermediate values by linear interpolation

h_4 = load head required by Ch 1,9 for deep tanks

h_5 = vertical distance, in metres, from longitudinal to deck at depth, D_2

h_6 = vertical distance, in metres, from the waterline at draught T to the longitudinal under consideration

b_f = the width of the face plate, in mm, of the side longitudinal under consideration, *see* Fig. 9.5.1 in Chapter 9

C_W = a wave head, in metres = $7{,}71 \times 10^{-2} L e^{-0{,}0044L}$ where e = base of natural logarithms 2,7183

F_λ = 1,0 for $L \le 200$ m

= $[1{,}0 + 0{,}0023(L - 200)]$ for $L > 200$ m

γ = $0{,}002l_{e1} + 0{,}046$

NOTES

1. The buckling requirements of Pt 3, Ch 4,7 are to be complied with. The ratio of the web depth, d_w, to web thickness, t, is to comply with the following requirements:
   (a) Built up profiles and rolled angles:
   $$\frac{d_w}{t} \le 60\sqrt{k_L}$$
   (b) Flat bars:
   $$\frac{d_w}{t} \le 18\sqrt{k_L} \text{ when continuous at bulkheads}$$
   $$\frac{d_w}{t} \le 15\sqrt{k_L} \text{ when non-continuous at bulkheads}$$
2. Where struts are fitted midway between transverses in way of double bottom tanks, or double skin construction, the modulus of the bottom or side longitudinals may be reduced by 50k per cent from that obtained from the locations (1), (2), or (3) as applicable.
3. Where the bilge radius exceeds the Rule height of a double bottom the modulus of the longitudinal above this nominal height is to be derived from the location (1) or (2) as applicable.
4. Where no bilge longitudinals are fitted and bilge brackets are required by location (3) in Table 1.5.2, at least two brackets are to be fitted.

Table 1.6.2 Shell framing (transverse)

Location	Modulus, in cm^3	Inertia, in cm^4
(1) Main, 'tween deck and superstructure frames in dry spaces, *see* Note 3	The greater of the following: (a) $Z = C\,s\,k\,h_{T1}\,H^2 \times 10^{-3}$ (b) $Z = 9{,}1 s\,k\,D_1 \times 10^{-3}$	$I = \frac{3{,}2}{k} HZ$
(2) Main and 'tween deck frames in way of fuel or water ballast tanks or cargo holds used for water ballast	The greater of the following: (a) 1,15 x Z from (1) (b) $Z = 6{,}7 s\,k\,h\,H_2^2 \times 10^{-3}$	$I = \frac{3{,}2}{k} HZ$
(3) Frames supporting hatch end beams or deck transverses, *see* Note 2	The greater of the following: (a) Z from (1) (b) $Z = 2{,}5\,(0{,}2 l_s^2 + H_1^2)\,k\,S_1 H_g$	$I = \frac{3{,}2}{k} HZ$
(4) Bottom frames of double bottom bracket floors	$Z = 2{,}15 s\,k\,T\,l_e \times 10^{-2}$	—

Symbols

D, T, s, k as defined in 1.5.1

C = end connection factor
= 3,4 where two Rule standard brackets are fitted
= 3,4 (1,8 – 0,8 (l_a/l) where one Rule standard bracket and one reduced bracket are fitted
= 3,4 (2,15 – 1,15 (l_{amean}/l)) where two reduced brackets are fitted
= 6,1 where one Rule standard bracket is fitted
= 6,1 (1,2 – 0,2 (l_a/l)) where one reduced bracket is fitted
= 7,3 where no bracket is fitted
The requirements for frames where brackets larger than Rule standard are fitted will be specially considered

l_a = equivalent arm length, in mm, as derived from Pt 3, Ch 10,3.4.1

l_{amean} = mean equivalent arm length, in mm, for both brackets

h_{T1} = head, in metres, at middle of H

$= C_w \left(1 - \frac{h_6}{D_1 - T}\right) F_\lambda$, in metres for frames where the mid-length of frame is above the waterline, at draught T

where $\left(1 - \frac{h_6}{D_1 - T}\right)$ is not to be taken less than 0,7

$= \left[h_6 + C_w \left(1 - \frac{h_6}{2T}\right)\right] F_\lambda$, in metres for frames where the mid-length of frame is below the waterline at draught T

h = h_4 or h_5, whichever is the greater

h_4 = tank head, in metres, as defined in Pt 3, Ch 3,5

h_5 = head, in metres, measured from the mid-length of H, to the deck at side

h_6 = vertical distance in metres, from waterline at draught T to the mid-length of H

l_s = distance, in metres, from side shell to inboard support of beam or transverse

l_e = effective length, in metres, of bottom frames for double bottom bracket floors

l_h = length, in metres, of hatch side girder

C_w = a wave head, in metres,
= $7{,}71 \times 10^{-2} L e^{-0{,}0044L}$
where e = base of natural logarithms 2,7183

F_λ = 1,0 for $L \le 200$ m
= (1,0 + 0,0023 (L – 200)) for $L > 200$ m

D_1 = D, but need not be taken greater than 1,6T

H = H_{MF} or H_{TF} as applicable, *see* Note 1

H_{MF} = vertical framing depth, in metres, of main frames, as shown in Fig. 1.6.1, but is to be taken not less than 3,5 m

H_{TF} = vertical framing depth, in metres, of 'tween deck frames, as shown in Fig. 1.6.1, but is to be taken not less than 2,5 m

H_1 = H, but need not be taken greater than 3,5 m

H_2 = H, where H_{MF} is to be taken not less than 2,5 m

H_9 = weather head, h_1, or cargo head, h_2, in metres, as defined in Pt 3, Ch 3,5, whichever is applicable

S = spacing, in metres, of deck transverses

S_1 = $\frac{l_h}{4}$ for hatch end beams
= S for transverses

NOTES
1. Where frames are inclined at more than 15° to the vertical, H_{MF} or H_{TF} is to be measured along a chord between span points of the frame.
2. If the modulus obtained from (3) for frames under deck transverses exceeds that obtained from (1) and (2), the intermediate frames may be reduced provided that the combined modulus is maintained and the reduction in any intermediate frame is not greater than 35 per cent. The reduced modulus is to be not less than that given by (1)(b).
3. The scantlings of main frames are not to be less than those of the 'tween deck frames above.

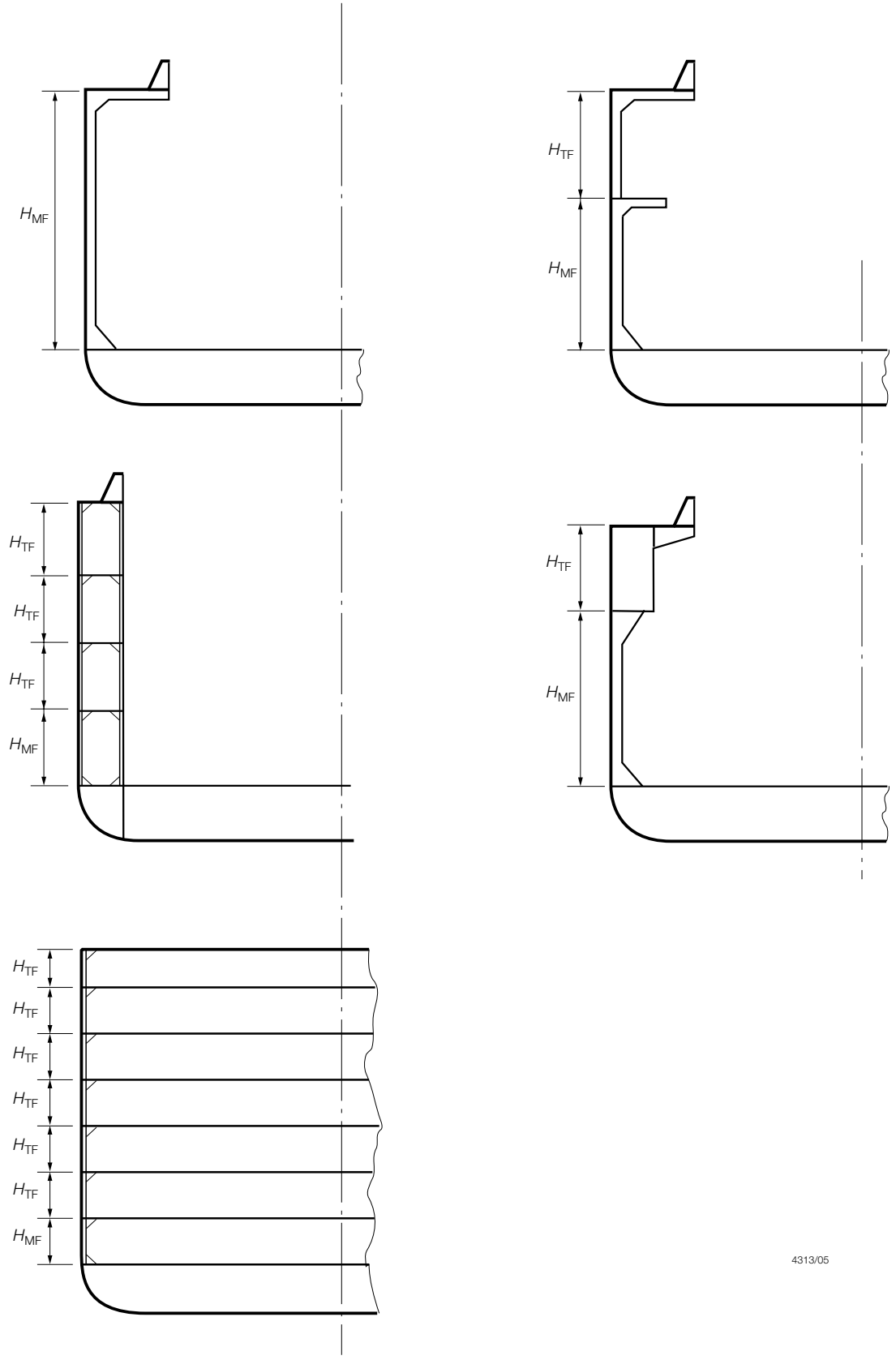

Fig. 1.6.1 Framing depths for various structural configurations

Table 1.6.3 Primary structure

Item and location	Modulus, in cm^3	Inertia, in cm^4
Longitudinal framing system:		
(1) Side transverses in dry cargo spaces	$Z = 10k\,S\,h_{T1}\,l_e^2$	—
(2) Side transverses in deep tanks	$Z = 11{,}7\rho\,k\,S\,h_4\,l_e^2$ or as (1) above, whichever is the greater	$I = \frac{2{,}5}{k}\,l_e Z$
Transverse framing system:		
(3) Side stringers in dry cargo spaces	$Z = 7{,}75k\,S\,h_{T1}\,l_e^2$	—
(4) Side stringers in deep tanks	$Z = 11{,}7\rho\,k\,S\,h_4\,l_e^2$ or as (3) above, whichever is the greater	$I = \frac{2{,}5}{k}\,l_e Z$
(5) Web frames supporting side stringers	Z determined from calculation based on following assumptions: (a) fixed ends (b) point loadings (c) head h_4 or h_{T1} as applicable (d) bending stress $\frac{93{,}2}{k}$ N/mm^2 $\left(\frac{9{,}5}{k}\text{ kgf/mm}^2\right)$ (e) shear stress $\frac{83{,}4}{k}$ N/mm^2 $\left(\frac{8{,}5}{k}\text{ kgf/mm}^2\right)$	$I = \frac{2{,}5}{k}\,l_e Z$

Symbols

T, S, l_e, k, ρ as defined in 1.5.1

h_4 = tank head, in metres, as defined in Pt 3, Ch 3,5

h_{T1} = head, in metres, at mid-length of span

= $C_w\left(1 - \frac{h_6}{D_1 - T}\right)F_\lambda$, in metres where the mid-length of span is above the waterline at draught T, where $\left(1 - \frac{h_6}{D_1 - T}\right)$ is not to be taken less than 0,7

= $\left[h_6 + C_w\left(1 - \frac{h_6}{2T}\right)\right]F_\lambda$, in metres where the mid-length of span is below the waterline at draught T

where

h_6 = vertical distance, in metres, from the waterline at draught T, to the mid-length of span

F_λ = 1,0 for $L \le 200$ m

= [1,0 + 0,0023 (L – 200)] for $L > 200$ m

C_w = a wave head, in metres

= $7{,}71 \times 10^{-2}\,Le^{-0{,}0044L}$

where e = base of natural logarithms 2,7183

D_1 = D but need not be taken greater than 1,6T

Section 7
Single bottom structure

7.1 General

7.1.1 Requirements are given in this Section for single bottom construction in association with transverse framing, and are generally applicable to the following ships:

(a) Cargo ships of less than 500 tons gross tonnage.
(b) Ships not propelled by mechanical means.
(c) Trawlers and fishing vessels.

Cases where a single bottom structure is adopted in association with longitudinal framing will be considered.

7.1.2 Ships with single bottoms are to have a centre girder fitted. In addition, one side girder is to be fitted on each side of the centreline where B does not exceed 10 m, and two side girders on each side where B is greater than 10 m and does not exceed 17 m. In addition, continuous or intercostal longitudinal stiffeners are to be fitted where the panel size exceeds the ratio 4 to 1. Centre and side girders are to extend as far forward and aft as practicable, and where they are cut at bulkheads the longitudinal strength is to be maintained.

7.1.3 Plate floors are to be fitted at every frame, and the tops of floors, in general, may be level from side to side, but in ships having considerable rise of floor, and towards the ends, the depth of the floor plates is to be increased. Floor plates forming part of a watertight or deep tank bulkhead are to be not less than 900 mm in depth measured at the centreline, and the thickness is to be not less than that required for the bottom strake of a bulkhead.

7.1.4 For ships intended to load or unload while aground, *see* Pt 3, Ch 9,13.

Table 1.7.1 Single bottom girders and floors

Item	Depth, in mm	Thickness, in mm	Face plate area, in cm^2
(1) Centre girder	As for floors	$t = \sqrt{Lk} + 2$ but not less than 6,0	$A_f = 0{,}67Lk$ but not less than 12,5 *See* Notes 2 and 3
(2) Side girders	As for floors	$t = \sqrt{Lk}$ but not less than 6,0	$A_f = (0{,}25L + 5)\,k$ but not less than 10,0 *See* Note 3
(3) Floors	Where $B \le 10$ m $d_f = 40\,(B + T)$ Where $B > 10$ m $d_f = 40\,(1{,}5B + T) - 200$ (*see* Note 1)	$t = \frac{s\sqrt{k}}{s_1}\left(\frac{d_f}{100} + 3\right)$ but not less than 6,0	$A_f = \frac{5Tsk}{s_1}\left(1 - \frac{2{,}5}{B}\right)$ *See* Notes 2 and 3

Symbols

L, B, T, s, k as defined in 1.5.1
b_f = breadth of face plate, in mm
d_f = overall depth of floor at the centreline, in mm
s_1 = a standard frame spacing, in mm, and is to be taken as $2(L + 240)$
A_f = cross-sectional area of face plate, in cm^2

NOTES
1. If the side frames are attached to the floors by brackets, the Rule depth of floor may be reduced by 15 per cent and the floor thickness determined using the reduced depth. The brackets are to be flanged and have the same thickness as the floors, and their arm lengths clear of the frame and are to be the same as the reduced floor depth given above.
2. The face plate thickness of floors and centre girder is to be not less than the floor plate thickness.
3. The thickness of face plates is to be:
not less than $\frac{b_f}{16\sqrt{k}}$ nor more than $\frac{b_f}{8}$

7.1.5 Provision is made for the free passage of water from all parts of the bottom to the suctions, taking into account the pumping rates required.

7.2 Girders and floors

7.2.1 The scantlings of girders and floors are to comply with the requirements of Table 1.7.1.

■ *Section 8*
Double bottom structure

8.1 Symbols and definitions

8.1.1 The symbols used in this Section are defined as follows:
L, B, T as defined in 1.5.1
d_{DB} = Rule depth of centre girder, in mm
d_{DBA} = actual depth of centre girder, in mm
h_{DB} = head from top of inner bottom to top of over-flow pipe, in metres
s = spacing of stiffeners, in mm
H_{DB} = height from tank top, at position under consideration, to deck at side amidships, in metres
Z_{BF} = section modulus of bottom frame at bracket floor, in cm^3.

8.2 General

8.2.1 Except as specified in 8.2.4, cargo ships other than tankers are to be fitted with a double bottom extending from the collision bulkhead to the after peak bulkhead, as far as this is practicable and compatible with the design and proper working of the ship.

8.2.2 Where a double bottom is required to be fitted, its depth at the centreline, d_{DB}, is to be in accordance with 8.3.1 and the inner bottom is to be continued out to the ship's side in such a manner as to protect the bottom to the turn of the bilge.

8.2.3 Small wells constructed in the double bottom, in connection with the drainage arrangements of holds, are not to extend in depth more than necessary. A well extending to the outer bottom, may however, be permitted at the after end of the shaft tunnel of the ship. Other well arrangements (e.g. for lubricating oil under main engines) may be considered provided they give protection equivalent to that afforded by the double bottom.

8.2.4 A double bottom need not be fitted in way of watertight compartments used exclusively for the carriage of liquids, provided the safety of the ship in the event of bottom damage is not thereby impaired. In addition, a double bottom need not be fitted on the following ships:
(a) Cargo ships of less than 500 tons gross tonnage.
(b) Ships not propelled by mechanical means.
(c) Trawlers and fishing vessels.

8.2.5 This Section provides for longitudinal or transverse framing in the double bottom, but for ships exceeding 120 m in length and for ships strengthened for heavy cargoes, longitudinal framing is, in general, to be adopted. For the additional requirements for ships specially strengthened for heavy cargoes, *see* Ch 7,1.3.

8.2.6 For ships intended to load or unload while aground, *see* Pt 3, Ch 9,13.

8.2.7 Girders and the side walls of duct keels are to be continuous, and the structure in way is to be sufficient to withstand the forces imposed by dry-docking the ship.

8.2.8 Adequate access is to be provided to all parts of the double bottom. The edges of all holes are to be smooth. The size of opening should not, in general, exceed 50 per cent of the double bottom depth, unless edge reinforcement is provided. In way of ends of floors and fore and aft girders at transverse bulkheads, the number and size of holes are to be kept to a minimum, and the openings are to be circular or elliptical. Edge stiffening may be required in these positions.

8.2.9 Provision is to be made for the free passage of air and water from all parts of the tank to the air pipes and suctions, account being taken of the pumping rates required. To ensure this, sufficient air holes and drain holes are to be provided in all longitudinal and transverse non-watertight primary and secondary members. The drain holes are to be located as close to the bottom as is practicable, and air holes are to be located as close to the inner bottom as is practicable, *see also* Pt 3, Ch 10,5.3 and Pt 4, Ch 9,5.8.

8.3 Girders

8.3.1 The centre girder is to have a depth of not less than that given by:

$$d_{DB} = 28B + 205\sqrt{T} \quad \text{mm}$$

nor less than 650 mm. The centre girder thickness is to be not less than:

$$t = (0{,}008d_{DB} + 4)\sqrt{k} \quad \text{mm}$$

nor less than 6,0 mm. The thickness may be determined using the value for d_{DB} without applying the minimum depth of 650 mm.

8.3.2 **In transversely framed ships** where the breadth, *B*, does not exceed 10 m, no side girders are required, and one vertical stiffener is to be fitted to the floors on each side, about midway between the centreline and the margin plate. One side girder is to be fitted where the breadth, *B*, exceeds 10 m but does not exceed 20 m, and for greater breadths two girders are to be fitted on each side of the centreline. The non-watertight side girders are to extend as far forward and aft as practicable and are to have a thickness not less than:

$$t = (0{,}008d_{DB} + 1)\sqrt{k} \quad \text{mm}$$

nor less than 6,0 mm.

8.3.3 Vertical stiffeners are to be fitted at every bracket floor (*see* 8.5.7), and are to have a depth not less than the depth of the tank top frame or 150 mm, whichever is the greater. For ships with a length, *L*, less than 90 m, stiffeners are to have a depth of not less than 1,65*L* mm with a minimum of 50 mm. The thickness is to be as required for the girder. Watertight side girders are to have a thickness 1 mm greater than required by 8.3.2 for non-watertight side girders. Where the double bottom tanks are interconnected with side tanks or cofferdams, the thickness is to be as for deep tanks (*see* 9.2.1) with *h*, in metres, measured to the highest point at the side tank or cofferdam.

8.3.4 **In longitudinally framed ships** one side girder is to be fitted where the breadth, *B*, exceeds 14 m, and two girders are to be fitted on each side of the centreline where *B* exceeds 21 m. The girders are to extend as far forward and aft as practicable and are to have a thickness not less than:

$$t = (0{,}0075d_{DB} + 1)\sqrt{k} \quad \text{mm}$$

nor less than 6,0 mm.
In general, a vertical stiffener, having a depth not less than 100 mm and a thickness equal to the girder thickness, is to be arranged midway between floors.

8.3.5 **Watertight side girders** are to have a plating thickness corresponding to the greater of the following:

(a) $t = (0{,}0075d_{DB} + 2)\sqrt{k}$ mm, or

(b) thickness *t* as for deep tanks (*see* 9.2.1) with *h*, in metres, measured to the highest point of the side tank, or cofferdam if the double bottom is interconnected with these tanks.

8.3.6 Watertight side girder stiffeners are to be in accordance with the requirements for watertight floors, *see* 8.5.4 and 8.5.5.

8.3.7 **Duct keels,** where arranged, are to have a thickness of side plates corresponding to the greater of the following:

(a) $t = (0{,}008d_{DB} + 2)\sqrt{k}$ mm, or

(b) thickness *t*, as for deep tanks (*see* 9.2.1) with *h*, in metres, measured to the highest point of the side tank, or cofferdam if the double bottom tank is interconnected with these tanks.

8.3.8 The sides of duct keels are, in general, to be spaced not more than 2,0 m apart. Where the sides of the duct keels are arranged on either side of a centreline or side girder, each side is, in general, to be spaced not more than 2,0 m from the centreline or side girder. The inner bottom and bottom shell within the duct keel are to be suitably stiffened. The primary stiffening in the transverse direction is to be suitably aligned with the floors in the adjacent double bottom tanks. Where the duct keels are adjacent to double bottom tanks which are interconnected with side tanks or cofferdams, the stiffening is to be in accordance with the requirements for deep tanks, *see* 9.2.1. Access to the duct keel is to be by watertight manholes or trunks.

8.3.9 The buckling requirements of Pt 3, Ch 4,7 are also to be satisfied.

8.4 Inner bottom plating and stiffening

8.4.1 The thickness of the inner bottom plating in the holds is to be not less than:

$$t = 0{,}00136\,(s + 660)\,\sqrt[4]{k^2\,LT} \quad \text{mm}$$

nor less than 6,5 mm in holds and 7,5 mm under hatchways if no ceiling is fitted.

8.4.2 The thickness of the inner bottom plating as determined in 8.4.1 is to be increased by 2 mm under the hatchways if no ceiling is fitted. If cargo is to be regularly discharged by grabs, *see* 2.2.2.

8.4.3 A margin plate, if fitted, is to have a thickness throughout 20 per cent greater than that required for inner bottom plating.

8.4.4 Where the double bottom tanks are common with side tanks or cofferdams, the thickness of the inner bottom plating is to be not less than that required for deep tanks (*see* 9.2.1), with h, in metres, taken to the highest point of the side tank or cofferdam.

8.4.5 Inner bottom longitudinals, or tank top frames at bracket floors within the range of cargo holds, are to have a section modulus not less than 85 per cent of the Rule value for bottom longitudinals (*see* 6.2.1) or bottom frames in way of bracket floors (*see* 6.3.1), whichever is applicable. The unsupported span of tank top frames is generally not to exceed 2,5 m. Where the double bottom tanks are interconnected with side tanks, hopper and topside tanks or cofferdams, the scantlings are to be not less than those required for deep tanks (*see* 9.2.1). For higher tensile steel inner bottom longitudinals the requirements of 6.2.2 are to be complied with where applicable.

8.4.6 The buckling requirements of Pt 3, Ch 4,7 are also to be satisfied.

8.5 Floors

8.5.1 **In longitudinally framed ships**, plate floors are to be fitted under bulkheads and elsewhere at a spacing not exceeding 3,8 m. The thickness of non-watertight plate floors is to be not less than:

$$t = (0{,}009d_{DB} + 1)\sqrt{k} \quad \text{mm}$$

nor less than 6,0 mm. The thickness need not be greater than 15 mm, but the ratio between the depth of the double bottom and the thickness of the floor is not to exceed $130\sqrt{k}$. This ratio may, however, be exceeded if suitable additional stiffening is fitted. Vertical stiffeners are to be fitted at each longitudinal, having a depth not less than 150 mm and a thickness equal to the thickness of the floors. For ships of length, L, less than 90 m, the depth is to be not less than $1{,}65L$ mm, with a minimum of 50 mm.

8.5.2 The thickness of watertight floors for longitudinally framed ships is to be not less than:

(a) $t = (0{,}008d_{DB} + 3)\sqrt{k}$ mm, or

(b) $t = (0{,}009d_{DB} + 1)\sqrt{k}$ mm

whichever is the greater,

but need not exceed 15 mm on floors of normal depth. The thickness is also to satisfy the requirements for deep tanks (*see* 9.2.1) with h, in metres, taken to the highest point of the side tank, or cofferdam if the double bottom tank is interconnected with these tanks. The scantlings of stiffeners are to be in accordance with the requirements of 9.2.1 for deep tanks, or as required by 8.5.4 whichever is the greater. The stiffeners are to be connected to the inner bottom and shell longitudinals.

8.5.3 Between plate floors, transverse brackets having a thickness not less than $0{,}009d_{DB}$ mm are to be fitted, extending from the centre girder and margin plate to the adjacent longitudinal. The brackets, which are to be suitably stiffened at the edge, are to be fitted at every frame at the margin plate, and those at the centre girder are to be spaced not more than 1,25 m.

8.5.4 **In transversely framed ships,** plate floors are to be fitted under bulkheads, in way of change in depth of double bottom and elsewhere at a spacing not exceeding 3,0 m. The shell inner bottom plating between these floors is to be supported by bracket floors. The thickness of non-watertight plate floors is to be not less than:

$$t = (0{,}008d_{DB} + 1)\sqrt{k} \quad \text{mm}$$

but need not exceed 15 mm and is to be not less than 6 mm. Watertight or strengthened floors are to be fitted below, or in the vicinity of, watertight bulkheads, and their thickness is to be 2 mm greater than that derived above for non-watertight floors, but need not exceed 15 mm on floors of normal depth. If the depth of such floors exceeds 915 mm but does not exceed 2000 mm, the floors are to be fitted with vertical stiffeners spaced not more than 915 mm apart and having a section modulus not less than:

$$Z = 5{,}41d_{DBA}^2\,h_{DB}\,s\,k \times 10^{-9} \quad \text{cm}^3$$

The ends of the stiffeners are to be sniped.

8.5.5 Where the double bottom tanks are interconnected with side tanks or cofferdams, or where the depth of floor exceeds 2000 mm, the scantlings of watertight floors are to be not less than those required for deep tanks (*see* 9.2.1), and the ends of the stiffeners are to be bracketed top and bottom.

8.5.6 Where floors form the boundary of a sea inlet box, the thickness of the plating is to be the same as the adjacent shell, but not less than 12,5 mm and need not exceed 25 mm. The scantlings of stiffeners, where required are, in general, to comply with 9.2.1 for deep tanks. Sniped ends for stiffeners on the boundaries of these spaces are to be avoided wherever practicable. The stiffeners should be bracketed or the free end suitably supported to provide alignment with backing structure.

8.5.7 **Where bracket floors** are fitted, the bottom frames are to be derived from 6.3.1. The unsupported span of the frames is not to exceed 2,5 m. The breadth of the brackets attaching the frames and the reverse frames to the centre girder and margin plate is to be three-quarters of the depth of the centre girder. The brackets are to be flanged on the unsupported edge and are to have the same thickness as the plate floors.

8.5.8 **Where struts** are fitted to reduce the unsupported span of the frames, reverse frames and longitudinals, they are to have a cross-sectional area of not less than:

(a) $A = 0{,}32 Z_{BF}$ cm^2 for $Z_{BF} \leq 83{,}5$, or

(b) $A = 23{,}2 + \dfrac{Z_{BF}}{25}$ cm^2 for $Z_{BF} > 83{,}5$

where Z_{BF} is the modulus, in cm^3, of the frame or longitudinal based on the effective length between floors as defined in Pt 3, Ch 3,3.

■ *Section 9* **Bulkheads**

9.1 General

9.1.1 The requirements of this Section cover watertight and deep tank transverse and longitudinal bulkheads. Requirements are also given for shaft tunnel boundaries and non-watertight bulkheads. For transverse bulkheads in way of ballast holds, stools may be required, *see* Ch 7,10.2.

9.1.2 The requirements of this Section apply to a vertical system of stiffening on bulkheads. They may also be applied to a horizontal system of stiffening provided that equivalent end support and alignment are provided.

9.1.3 For number and disposition of transverse watertight bulkheads, *see* Pt 3, Ch 3,4.

9.1.4 The buckling requirements of Pt 3, Ch 4,7 are also to be satisfied.

9.2 Watertight and deep tank bulkheads

9.2.1 The scantlings of watertight and deep tank bulkheads are to comply with the requirements of Tables 1.9.1 to 1.9.3. Where bulkhead stiffeners support deck girders, transverses or pillars over, the requirements of 4.4.11 are also to be satisfied.

9.2.2 In way of partially filled holds or tanks, the scantlings and structural arrangements of the boundary bulkheads are to be capable of withstanding the loads imposed by the movement of the liquid in those spaces. The magnitude of the predicted loadings, together with the scantling calculations may require to be submitted, *see* Pt 3, Ch 3,5.4.

9.2.3 In deep tanks, oil fuel or oil carried as cargo is to have a flash point of 60ºC or above (closed cup test). Where tanks are intended for other liquid cargoes of a special nature the scantlings and arrangements will be considered in relation to the nature of the cargo.

9.2.4 Where watertight bulkhead stiffeners are cut in way of watertight doors in the lower part of a bulkhead, the opening is to be suitably framed and reinforced. Where stiffeners are not cut but the spacing between the stiffeners is increased on account of watertight doors, the stiffeners at the sides of the doorways are to be increased in depth and strength so that the efficiency is at least equal to that of the unpierced bulkhead, without taking the stiffness of the door frame into consideration. Watertight recesses in bulkheads are generally to be so framed and stiffened as to provide strength and stiffness equivalent to the requirements for watertight bulkheads.

9.2.5 A centreline bulkhead is, generally, to be fitted in deep tanks which extend from side to side of the ship and are intended for the carriage of oil fuel for the ship's use. The bulkhead may be intact or perforated as desired. If intact, the scantlings are to be as required for boundary bulkheads. If perforated, the modulus of the stiffeners may be 50 per cent of that required for boundary bulkheads, using h_4 measured to the crown of the tank. The stiffeners are to be bracketed at top and bottom. The area of perforation is to be not less than five per cent nor more than 10 per cent of the total area of the bulkhead. Where brackets from horizontal girders on the boundary bulkheads terminate at the centreline bulkhead, adequate support and continuity are to be maintained.

9.3 Shaft tunnels

9.3.1 Where shaft tunnels are required as specified in Pt 3, Ch 3,4 the thickness of the tunnel plating is to comply with Table 1.9.1 for holds or deep tanks as appropriate. If the top plating is well curved, the thickness may be reduced by 10 per cent in dry cargo holds. If the top plating is flat, it is to be not less than 1,1 times the thickness required for watertight bulkheads in dry cargo holds. Under hatchways the top plating is to be increased by 2 mm, unless covered with wood not less than the thickness specified in 2.2.2, which is to be secured by fastenings which do not penetrate the plating. Where it is intended to use plywood or other forms of ceiling of an approved type instead of planking, the thickness will be considered in each case. The tunnel stiffeners are to comply with Table 1.9.1 for holds or deep tanks, as appropriate. When the section modulus of curved stiffeners is determined, the values of ω_1 and ω_2 are to be taken as 1,0. The span of the stiffener, l_e, is to be taken as the overall height of the tunnel, measured vertically at the centreline of the tunnel. If the tunnel top is flat, scantlings of the stiffeners are also to comply with 4.3. The lower end connection to the tank top is to be welded. Additional strengthening is to be fitted under the heels of pillars or masts stepped on the tunnel.

9.4 Non-watertight bulkheads

9.4.1 The scantlings are to be in accordance with Table 1.4.8.

Table 1.9.1 Watertight and deep tank bulkhead scantlings

Item and requirement	Watertight bulkheads	Deep tank bulkheads
(1) Plating thickness for plane, symmetrically corrugated and double plate bulkheads	$t = 0{,}004sf\sqrt{h_4k}$ mm but not less than 5,5 mm	$t = 0{,}004sf\sqrt{\frac{\rho h_4 k}{1{,}025}} + 2{,}5$ mm but not less than 6,5 mm, where $L < 90$ m nor less than 7,5 mm, where $L \geq 90$ m
	In the case of symmetrical corrugations, s is to be taken as b or c in Fig. 3.3.1 in Pt 3, Ch 3, whichever is the greater	
(2) Modulus of rolled and built stiffeners, swedges, double plate bulkheads and symmetrical corrugations	$Z = \frac{skh_4 l_e^2}{71\gamma(\omega_1 + \omega_2 + 2)}$ cm^3	$Z = \frac{\rho skh_4 l_e^2}{22\gamma(\omega_1 + \omega_2 + 2)}$ cm^3
	In the case of symmetrical corrugations, s is to be taken as p, *see also* Note 2	
(3) Inertia of rolled and built stiffeners and swedges	—	$I = \frac{2{,}3}{k} l_e Z$ cm^4
(4) Symmetrical corrugations and double plate bulkheads	Additional requirements to be complied with as detailed in Table 1.9.2	
(5) Stringers or webs supporting vertical or horizontal stiffening		
(a) Modulus	$Z = 5{,}5kh_4 S l_e^2$ cm^3	$Z = 11{,}7\rho kh_4 S l_e^2$ cm^3
(b) Inertia	—	$I = \frac{2{,}5}{k} l_e Z$ cm^4

Symbols

s, S, I, k, ρ as defined in 1.5.1

d_w = web depth of stiffening member, in mm

$f = 1{,}1 - \frac{s}{2500S}$ but not to be taken greater than 1,0

h_4 = load head, in metres measured as follows:

(a) For watertight bulkhead plating, the distance vertically from a point one-third of the height of the plate above its lower edge to a point 0,91 m above the bulkhead deck at side or perpendicular to the deepest equilibrium waterline in damaged condition obtained from applicable damage stability calculations, whichever is the greater, *see also* Fig. 3.5.2 in Pt 3, Ch 3

(b) For deep tank bulkhead plating, the distance from a point one-third of the height of the plate above its lower edge to the top of the tank, or half the distance to the top of the overflow, whichever is the greater, *see also* Fig. 3.5.2 in Pt 3, Ch 3

(c) For watertight bulkhead stiffeners or girders, the distance vertically from the middle of the effective length to a point 0,91 m above the bulkhead deck at side, or perpendicular to the deepest equilibrium waterline in damaged condition obtained from applicable damage stability calculations, whichever is the greater , *see also* Fig. 3.5.2 in Pt 3, Ch 3

(d) For deep tank bulkhead stiffeners or girders, the distance from the middle of the effective length to the top of the tank, or half the distance to the top of the overflow, whichever is the greater, *see also* Fig. 3.5.2 in Pt 3, Ch 3

l_e = effective length of stiffening member, in metres, and for bulkhead stiffeners, to be taken as $l - e_1 - e_2$, *see also* Fig. 1.9.1

p = spacing of corrugations as shown in Fig. 3.3.1 of Pt 3, Ch 3

γ = 1,4 for rolled or built sections and double plate bulkheads
= 1,6 for flat bars
= 1,1 for symmetrical corrugations of deep tank bulkheads
= 1,0 for symmetrical corrugations of watertight bulkheads

ω, e = as defined in Table 1.9.3, *see also* Fig. 1.9.1

NOTES

1. In no case are the scantlings of deep tank bulkheads to be less than the requirements for watertight bulkheads where watertight bulkheads are required by Pt 3, Ch 3,5.
2. In calculating the actual modulus of symmetrical corrugations, the panel width b is not to be taken greater than that given by Pt 3, Ch 3,3.2.
3. For rolled or built stiffeners with flanges or face plates, the web thickness is to be not less than $\frac{d_w}{60\sqrt{k}}$ whilst for flat bar stiffeners the web thickness is to be not less than $\frac{d_w}{18\sqrt{k}}$

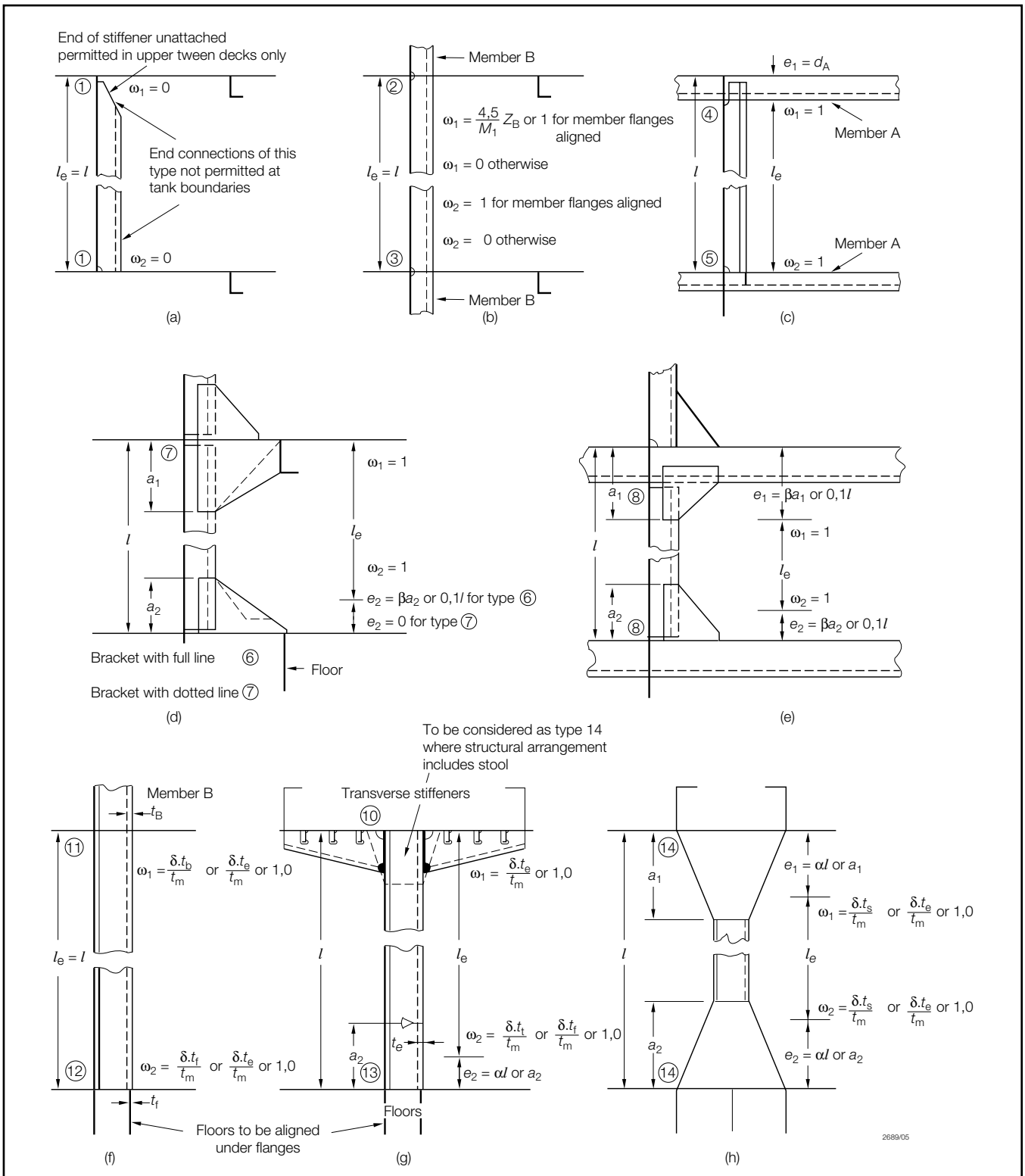

Fig. 1.9.1 End connections

Table 1.9.2 Symmetrical corrugations and double plate bulkheads (additional requirements)

Symbols	Type of bulkhead	Parameter	Watertight bulkheads	Deep tank bulkheads
s, k as defined in 1.5.1 b = panel width as shown in Fig. 3.3.1 in Pt 3, Ch 3 d = depth, in mm, of symmetrical corrugation or double plate bulkhead l_e as defined in Table 1.9.1 A_w = shear area, in cm^2, of webs of double plate bulkhead θ = angle of web corrugation to plane of bulkhead	Symmetrically corrugated, *see also* Notes 1 and 2	$\frac{b}{t}$	Not to exceed: $85\sqrt{k}$ at top, and $70\sqrt{k}$ at bottom	Not to exceed: $70\sqrt{k}$ at top, and at bottom
		d	—	To be not less than: $39l_e$ mm
		θ	To be not less than 40°	
NOTES 1. The plating thickness at the middle of span l_e of corrugated or double plate bulkheads is to extend not less than $0{,}2l_e$ m above mid-span. 2. Where the span of corrugations exceeds 15 m, a diaphragm plate is to be arranged at about mid-span. 3. *See also* Pt 3, Ch 10,5.2.1.	Double plate, *see also* Notes 1 and 3	$\frac{s}{t}$	Not to exceed: $75\sqrt{k}$ at top, and $65\sqrt{k}$ at bottom	
		$\frac{d}{t_w}$	Not to exceed: $85\sqrt{k}$ at top, and $75\sqrt{k}$ at bottom	
		d	—	To be not less than: $39l_e$ mm
		A_w	To be not less than: $\frac{0{,}12Z}{l_e}$ cm^2 at top, and $\frac{0{,}18Z}{l_e}$ cm^2 at bottom	To be not less than: $\frac{0{,}07Z}{l_e}$ cm^2 at top, and $\frac{0{,}10Z}{l_e}$ cm^2 at bottom

Table 1.9.3 Bulkhead end constraint factors (*see continuation*)

Type	End connection (*see* Fig. 1.9.1)			ω	e	μ
Rolled or built stiffeners and swedges						
1	End of stiffeners unattached or attached to plating only			0	0	—
2	Members with webs and flanges (or bulbs) in line and attached at deck or horizontal girder, *see also* Note 1	Adjacent member of B of smaller modulus		The lesser of $\frac{4{,}5Z_B}{M_1}$ or 1,0	0	—
3		Adjacent member of B of same or larger modulus		1,0	0	—
4	Bracketless connection to longitudinal member	Member A within length l		1,0	$\frac{d_A}{1000}$	—
5		Member A outside length l		1,0	0	—
6	Bracketed connection	To transverse member	Bracket extends to floor	1,0	The lesser of βa or $0{,}1l$	—
7			Otherwise	1,0	0	—
8		To longitudinal member		1,0	The lesser of βa or $0{,}1l$	—
Symmetrical corrugations or double plate bulkheads						
9	Welded directly to deck – no bulkhead in line	No longitudinal brackets		0	0	—
10		With longitudinal brackets and transverse stiffeners supporting corrugated bulkhead		The lesser of $\frac{\delta t_e}{t_m}$ or 1,0	0	—
11	Welded directly to deck or girder	Bulkhead B, having same section, in line		The least of $\frac{\delta t_B}{t_m}$ or $\frac{\delta t_e}{t_m}$ or 1,0	0	—
12	Welded directly to tank top and effectively supported by floors in line with each bulkhead flange, *see also* Note 2	Thickness at bottom same as that at mid-span		The least of $\frac{\delta t_f}{t_m}$ or $\frac{\delta t_e}{t_m}$ or 1,0	0	—
13		Thickness at bottom greater than that at mid-span		The least of $\frac{\delta t_f}{t_m}$ or $\frac{\delta t_e}{t_m}$ or 1,0	The lesser of αl or a	The lesser of $\frac{t_f}{t_m}$ or $\frac{t_e}{t_m}$
14	Welded to stool efficiently supported by ship's structure			For deep tank bulkheads 1,0 For watertight bulkheads the least of $\frac{\delta t_s}{t_m}$ or $\frac{\delta t_e}{t_m}$ or 1,0	The lesser of αl or a	$\frac{10Z_s}{M_2}$

Table 1.9.3 Bulkhead end constraint factors (*conclusion*)

Symbols

s, l, ρ, k, as defined in 1.5.1

a = height, in metres, of bracket or end stool or lowest strake of plating of symmetrically corrugated or double plate bulkheads, *see* Fig. 1.9.1

d_A = overall depth, in mm, of adjacent member A

e = effective length, in metres, of bracket or end stool, *see* Fig. 1.9.1

h_o = h_4 but measured from the middle of the overall length l

l_e, p, h_4 as defined in Table 1.9.1

t_B = thickness, in mm, of flange plating of member B

t_f = thickness, in mm, of supporting floor

t_m, t_e = thickness, in mm, of flange plating of corrugation or double plate bulkhead at mid-span or end, respectively

Subscripts 1 and 2 when applied to ω, e, and a refer to the top and bottom ends of stiffener

$M_1 = \dfrac{h_4\, s\, l_e^2}{71}$ for watertight bulkheads

$= \dfrac{\rho\, h_4\, s\, l_e^2}{22}$ for deep tank bulkheads

$M_2 = \dfrac{h_o\, s\, l^2}{71}$ for watertight bulkheads

$= \dfrac{\rho\, h_o\, s\, l^2}{22}$ for deep tank bulkheads

In the case of symmetrical corrugations $s = p$

Z_B = section modulus, in cm^3, of adjacent member B

Z_s = section modulus, in cm^3, of horizontal section of stool adjacent to deck or tank top over breadth s or p (as applicable)
All material which is continuous from top to bottom of stool may be included in the calculation

α = a factor depending on μ and determined as follows:
where $\mu \le 1{,}0$ $\alpha = 0$
where $\mu > 1{,}0$ $\alpha = 0{,}5 - \dfrac{1}{\sqrt{2\mu + 2}}$

β = a factor depending on the end bracket stiffening and to be taken as:
- 1,0 for brackets with face bars directly connected to stiffener face bars
- 0,7 for flanged brackets
- 0,5 for unflanged brackets

μ = a factor representing end constraint for symmetrical corrugation and double plate bulkheads

ω = an end constraint factor relating to the different types of end connection, *see* Fig. 1.9.1

t_s = thickness, in mm, of stool adjacent to bulkhead

δ = 1,0 generally

$= \dfrac{0{,}932\sqrt{k}}{\xi}$ for corrugated watertight bulkheads

ξ = 1,0 where full continuity of corrugation webs is provided at the ends
= greater of 1,0 and (η + 0,333) where full continuity is not provided

η = lesser of 1,0 and $\dfrac{50\, t_m \sqrt{k}}{b}$ for welded sections

= lesser of 1,0 and $\dfrac{60\, t_m \sqrt{k}}{b}$ for cold formed sections

NOTES
1. Where the end connection is similar to type 2 or 3, but member flanges (or bulbs) are not aligned and brackets are not fitted, $\omega = 0$.
2. Where the end connection is similar to type 12 or 13, but a transverse girder is arranged in place of one of the supporting floors, special consideration will be required.

Ferries, Roll on–Roll off Ships and Passenger Ships

Section

1 **General**

2 **Longitudinal strength**

3 **Deck structure**

4 **Shell envelope plating**

5 **Shell envelope framing**

6 **Double bottom**

7 **Peak, watertight and deep tank bulkheads**

8 **Bow doors and inner doors**

9 **Subdivision structure on vehicle deck**

10 **Masts and standing rigging**

11 **Miscellaneous openings**

12 **Glass structures**

13 **Direct calculation**

■ *Section 1* General

1.1 Application

1.1.1 This Chapter applies to sea-going roll on-roll off cargo ships, passenger ships and sailing passenger ships defined as follows:

(a) A passenger ferry is defined as a ship specially designed and constructed for the carriage of passengers on a regular scheduled service between specified ports operating in reasonable weather conditions.

(b) A passenger/vehicle ferry is defined as a ship specially designed and constructed for the carriage of passengers and vehicles on a regular scheduled service between specified ports operating in reasonable weather conditions.

(c) A roll on-roll off cargo ship is defined as a ship specially designed and constructed for the carriage of vehicles, and cargo in pallet form or in containers, and loaded/unloaded by wheeled vehicles.

(d) A passenger ship is defined as a ship specially designed and constructed for the carriage of more than 12 passengers.

(e) A sailing passenger ship is defined as a ship specially designed and constructed for the carriage of more than 12 passengers and incorporating sail devices which are intended to be the primary means of propulsion.

1.1.2 Ships intended only to operate in certain areas or conditions which have been agreed by the Committee, as defined in Pt 1, Ch 2, will receive individual consideration on the basis of the rules with respect to the environmental conditions agreed for the design basis and approval.

1.1.3 The scantlings and arrangements are to be as required by Chapter 1 except as otherwise specified in this Chapter.

1.1.4 The scantlings of structural items may be determined by direct calculation. For passenger ships where it is considered that the superstructure will be subjected to a significant load from flexure of the hull girder; or, where it is required to utilise the load carrying capability of the superstructure for longitudinal strength, the scantlings of the primary supporting structure are to be assessed by direct calculations and the ShipRight notations **SDA** and **CM** are mandatory, *see* 1.3 and Section 11.

1.2 Structural configuration

1.2.1 The requirements provide for a basic structural configuration of a multi-deck hull which includes a double bottom, and in some cases wing tanks up to the lowest deck.

1.2.2 For passenger ships, the structural arrangements detailed in Chapter II-1, Part B, of the *International Convention for the Safety of Life at Sea, 1974*, and applicable amendments as they apply to passenger ships are to be complied with in their entirety.

1.2.3 Where bulkheads are omitted in accordance with Pt 3, Ch 3,4, a system of partial bulkheads, web frames and deck transverses should be fitted to provide equivalent transverse strength.

1.2.4 Longitudinal framing is, in general, to be adopted at the strength deck and at the bottom, but special consideration will be given to proposals for transverse framing in these regions.

1.2.5 Reference should be made to the Regulations of the *International Convention for the Safety of Life at Sea, 1974* and applicable amendments and to the relevant Statutory Requirements of the National Authority of the country in which the ship is to be registered.

1.2.6 Attention is also drawn to the requirements for passenger ships given in:

- Bulkhead requirements, *see* Pt 3, Ch 3,4
- Closing arrangements for shell, deck and bulkheads, *see* Pt 3, Ch 11,6, Ch 11,8 and Ch 11,9
- Electrical Installations, *see* Pt 6, Ch 2
- Fire protection, detection and extinction, *see* SOLAS Reg. II-2/B and C.

1.2.7 Attention is drawn to National Authority requirements relating to the stowage and securing of vehicles and cargo units on board roll on-roll off ships. Steel used for the construction of fixed securing fittings attached to the ship's structure is to comply with the requirements of *Rules for the Manufacture, Testing and Certification of Materials* (hereinafter referred to as the Rules for Materials (Part 2), or with an equivalent acceptable specification. Due account is to be taken of the grade and tensile strength of the hull material in way of the attachment and the chemical composition of the steel is to be such as to ensure acceptable qualities of weldability.

1.2.8 Sailing passenger ships are to be fitted with auxiliary propulsive power to ensure adequate speed and manoeuvrability of the vessel in conditions when the sail systems are not available for use. The auxiliary propulsion and other essential machinery is to comply with the requirements of Part 5 of the Rules, as applicable.

1.2.9 Sail systems may be made up in the form of soft sails, semi-rigid and rigid sail configurations including wind turbines or systems incorporating rotating cylinders.

1.2.10 For sailing vessels, a continuous visual read out of the apparent wind speed and direction is to be available to the ship's master when the vessel is under way. Sail control and service systems are to provide adequate speed of response to neutralise the sail system in the event of high wind conditions. Sufficient information and evidence is to be submitted to substantiate that the foregoing arrangements are in place.

1.2.11 For sailing passenger ships, the Rules for classification will, in principle, apply to the mast arrangements and standing gear, but will exclude running gear, yards, booms and sail arrangements.

1.2.12 For sailing passenger ships, the equipment requirements will be in accordance with the letter and numeral two grades higher than that corresponding to the calculated Equipment Numeral.

1.3 Class notations

1.3.1 In general, ships complying with the requirements of this Chapter will be eligible to be classed:

'**100A1 passenger ferry**', or
'**100A1 passenger/vehicle ferry**', or
'**100A1 roll on-roll off cargo ship**', or
'**100A1 passenger ship**', or
'**100A1 sailing passenger ship**'.

1.3.2 A ship assigned a class notation incorporating the word 'passenger' which is also designed to fulfil other functions not associated with passenger carrying, is to comply with the requirements of this Chapter for passenger ships together with the requirements of the relevant Chapter of this Part for the particular ship type.

1.3.3 Where ferries are specially reinforced for the carriage of trains on fixed rails, the class notation will also include the word 'train'.

1.3.4 The Regulations for the classification and assignment of class notations are given in Pt 1, Ch 2, to which reference should be made.

1.3.5 The 'ShipRight Procedures' for hull construction of ships are detailed in Pt 3, Ch 16 and the classification notations and descriptive notes associated with these procedures are given in Pt 1, Ch 2,2.

1.3.6 The 'Structural Design Assessment' (**SDA**) and 'Construction Monitoring' (**CM**) procedures detailed in the *ShipRight Procedures Manual*, published by Lloyd's Register (hereinafter referred to as 'LR'), are mandatory for passenger ships where it is considered that the superstructure will be subjected to a significant load from flexure of the hull girder; or, where it is required to utilise the load carrying capability of the superstructure for longitudinal strength, and for other passenger ships of abnormal hull form, or of unusual structural configuration or complexity.

1.4 Information required

1.4.1 In addition to the information and plans required by Pt 3, Ch 1,5, the following details are to be submitted:

- The intended service areas required for ships designed to operate within specified geographical limits.
- Stern or bow ramps.
- Bow, stern and side doors.
- Movable decks, if fitted, including stowing arrangements for portable components.
- Sail plans and associated operational and design conditions, including apparent wind speeds (sailing ships).
- Masts and all structural components of the standing rigging (sailing ships).
- The standing rigging and all standing rigging attachments (sailing ships).
- The design deck loadings including details of wheeled vehicles, *see* Pt 3, Ch 9,3, and trains, where applicable.
- Locations of fixed securing points for wheeled vehicles, with indication of the magnitude and direction of the imposed lashing force.

1.5 Symbols

1.5.1 For the definition of symbols not defined in this Chapter, *see* Ch 1,1.5.

1.5.2 The following definitions apply to ships employing sails:

Standing rigging	– Rigging of fixed length used to support masts/bowsprit.
Running rigging	– Rigging used to control yards, booms and sails and which may pass over revolving sheaves.
Apparent wind speed	– The vector resultant of the combination of real wind speed and ship velocity.

■ *Section 2* Longitudinal strength

2.1 General

2.1.1 Longitudinal strength calculations are to be made in accordance with the requirements given in Pt 3, Ch 4 and the additional notes contained in this Section.

2.1.2 The design vertical wave bending moments and design wave shear forces to be used in Pt 3, Ch 4 are to be determined in accordance with Sections 2.3 and 2.4 below. For ships of unusual hullform or where their design parameters are outwith the applicability of the Rules, *see* Pt 3, Ch 4, special consideration will be given to the values and distributions of the wave induced global loads.

2.1.3 The still water bending moment and shear force envelopes are to take into account the requirements of Section 2.3.

2.1.4 For ships where the side shell or side casings contain large openings or where the effectiveness of the superstructures in resisting hull girder bending loads is expected to be reduced by the presence of large numbers of windows or openings, the combined hull and superstructure response may require to be verified using direct calculation techniques.

2.2 Calculation of hull section modulus

2.2.1 The calculation of section modulus is to be in accordance with Pt 3, Ch 3, 3.4 and the additional notes in this Section. In general, the effective sectional area of continuous longitudinal strength members, after deduction of openings, is to be used for the calculation of midship section modulus. For ships where the effectiveness of the superstructure is only partial due to the presence of large or numerous shell openings or discontinuities in the shell envelope, then an equivalent section modulus for the purposes of this section may be derived using direct calculations.

2.2.2 Structural members which contribute to the overall hull girder strength are to be carefully aligned so as to avoid discontinuities resulting in abrupt variations of stresses and are to be kept clear of any form of openings which may affect their structural performances.

2.2.3 In general, short superstructures, *see also* Pt 3, Ch 3,3.4.2, or deckhouses will not be accepted as contributing to the global longitudinal or transverse strength of the ship. However, where it is proposed to include substantial, continuous stiffening members, special consideration will be given to their inclusion on submission of the designer's/builder's calculations, *see also* 2.6.

2.2.4 Adequate transition arrangements are to be fitted at the ends of effective continuous longitudinal strength members in the deck and bottom structures.

2.2.5 Scantlings of all continuous longitudinal members of the hull girder based on the minimum section stiffness requirements determined from Pt 4, Ch 4,5 are to be maintained within 0,4*L* amidships. However, in special cases, based on consideration of type of ship, hull form and loading conditions, the scantlings may be gradually reduced towards the ends of the 0,4*L* part, bearing in mind the desire not to inhibit the ship's loading and operational flexibility.

2.2.6 Structural material which is longitudinally continuous but which is not considered to be fully effective for longitudinal strength purposes may be specially considered. The global longitudinal strength assessment must take into account the presence of such material when it can be considered effective. The consequences of failure of such structural material and subsequent redistribution of stresses into or additional loads imposed on the remaining structure is to be considered.

2.2.7 In particular, all longitudinally continuous material will be fully effective in tension whereas this may not be so in compression due to a low buckling capability. In this case, it may be necessary to derive and apply different hull girder section moduli to the hogging and sagging bending moment cases.

2.3 Still water bending moments and shear forces

2.3.1 The design still water hogging and sagging bending moment distribution envelope, M_S, is to be taken as the maximum sagging (negative) and maximum hogging (positive) still water bending moments, calculated at each position along the ship. The maximum moments from all loading conditions are to be used to define the still water bending moment distribution envelope.

2.3.2 It is normal for ships which have a low deadweight requirement or a uniform loading rate in association with a low block coefficient to have a hogging still water bending moment in all conditions of loading. For these ships, the maximum design sagging still water bending moment may be taken as the minimum actual hogging bending moment.

2.3.3 The design still water shear force distribution envelope, Q_S, is to be taken as the maximum positive and negative shear force values, calculated at each position along the ship. The maximum shear forces from all loading conditions are to be used to define the still water shear force distribution envelope.

2.4 Design vertical wave bending moments

2.4.1 The minimum value of vertical wave bending moment, M_w at any position along the ship may be taken as follows:

$$M_w = f_1 f_2 C_2 M_{wo} \quad \text{kNm (tonne-f m)}$$

where

$M_{wo} = 0{,}1 C_1 L^2 B_{WL} (C_b + 0{,}7)$ kNm

($M_{wo} = 0{,}0102 C_1 L^2 B_{WL} (C_b + 0{,}7)$ tonne-f m)

B_{WL} = maximum waterline breadth, in metres

C_1, C_2, L and C_b are given in Pt 3, Ch 4,5

and

f_1 is given in Pt 3, Ch 4,5

f_2 is the hogging, f_{fH}, or sagging, f_{fS}, correction factor based on the amount of bow flare, stern flare, length and effective buoyancy of the aft end of the ship above the waterline

f_{fS} is the sagging (negative) moment correction factor and is to be taken as

$f_{fS} = -1{,}10 R_A^{0,3}$ for values of $R_A > 1{,}0$

$f_{fS} = -1{,}10$ for values of $R_A \le 1{,}0$

f_{fH} is the hogging (positive) moment correction factor and is to be taken as

$$f_{fH} = \frac{1{,}9 C_b}{(C_b + 0{,}7)}$$

R_A is an area ratio factor, *see* 2.4.2.

2.4.2 The area ratio factor, R_A, for the combined stern and bow shape is to be derived as follows:

$$R_A = \frac{30\,(A_{BF} + 0{,}5 A_{SF})}{L\, B_{WL}}$$

where

A_{BF} is the bow flare area, in m^2

A_{SF} is the stern flare area, in m^2

2.4.3 The bow flare area, A_{BF}, is illustrated in Fig. 2.2.1 and may be derived as follows:

$$A_{BF} = A_{UB} - A_{LB} \quad \text{m}^2$$

where

A_{UB} is half the water plane area at a waterline of $T_{C,U}$ of the bow region of the hull forward of 0,8L from the AP

A_{LB} is half the water plane area at the design draught of the bow region of the hull forward of 0,8L from the AP

NOTE

The AP is to be taken at the aft end of L

The design draught is to be taken as T, *see* Pt 3, Ch 1,6.1.

Alternatively the following formula may be used

$$A_{BF} = 0{,}05L\,(b_0 + 2b_1 + b_2) + b_0\, a/2 \quad \text{m}^2$$

where

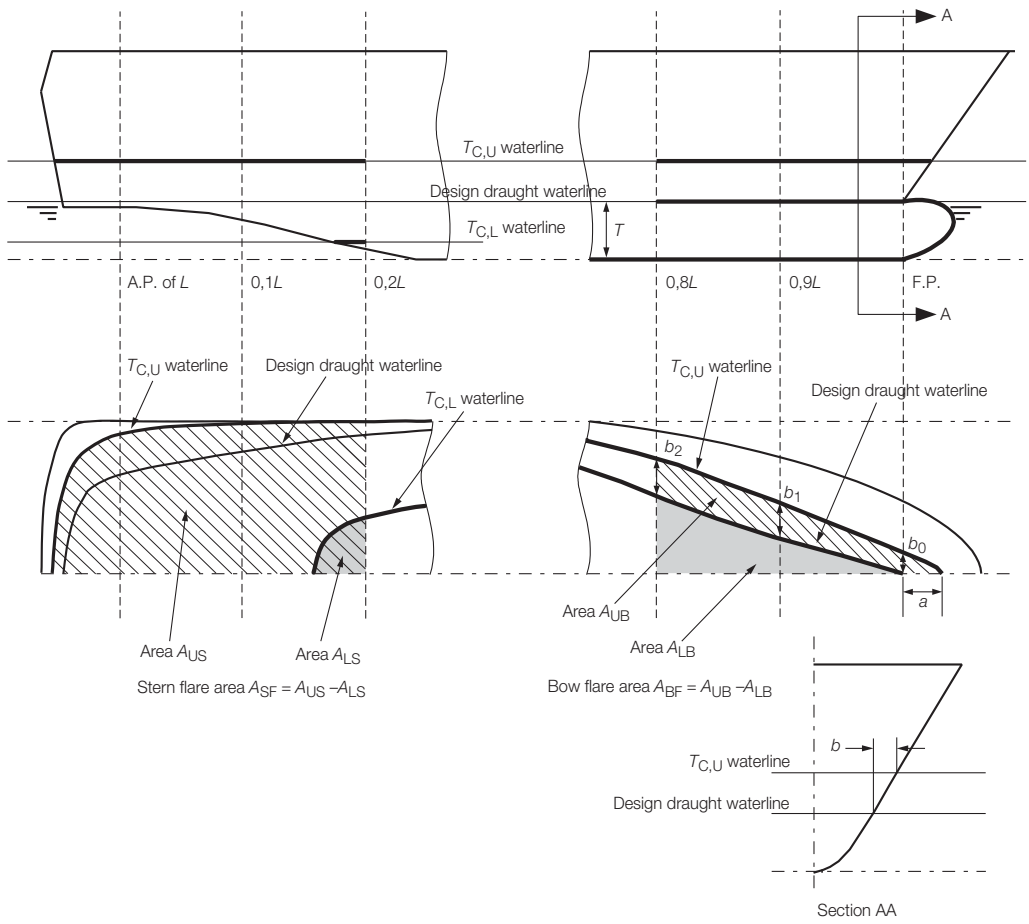

Fig. 2.2.1
Derivation of bow and stern flare areas

b_0 = projection of $T_{C,U}$ waterline outboard of the design draught waterline at the FP, in metres, *see* Fig. 2.2.1

b_1 = projection of $T_{C,U}$ waterline outboard of the design draught waterline at 0,9*L* from the AP, in metres

b_2 = projection of $T_{C,U}$ waterline outboard of the design draught waterline at 0,8*L* from the AP, in metres

a = projection of $T_{C,U}$ waterline forward of the FP, in metres

$T_{C,U}$ is a waterline taken $C_1/2$ m above the design draught

$$T_{C,U} = T + \frac{C_1}{2} \text{ m}$$

C_1 is given in Pt 3, Ch 4, Table 4.5.1

For ships with large bow flare angles above the $T_{C,U}$ waterline the bow flare area may need to be specially considered.

2.4.4 The stern flare area, A_{SF}, is illustrated in Fig. 2.2.1 and is to be derived as follows:

$A_{SF} = A_{US} - A_{LS}$ m²

where

A_{US} is half the water plane area at a waterline of $T_{C,U}$ of the stern region of the hull aft of 0,2*L* from the AP

A_{LS} is half the water plane area at a waterline of $T_{C,L}$ of the stern region of the hull aft of 0,2*L* from the AP

$T_{C,L}$ = is a waterline taken $C_1/2$ m below the design draught

$$T_{C,L} = T - \frac{C_1}{2} \text{ m}$$

For ships with tumblehome in the stern region, the maximum breadth at any waterline less than $T_{C,U}$ is to be used in the calculation of A_{US}. The effects of appendages including bossings are to be ignored in the calculation of A_{LS}.

2.4.5 Direct calculation methods may be used to derive the vertical wave bending moments, *see* Pt 3, Ch 4,2.5.

2.4.6 The sagging correction factor, f_{fS}, in the vertical wave bending moment formulation in 2.3.1 may be derived by direct calculation methods. Appropriate direct calculation methods include a combination of long term ship motion analysis, non linear ship motion analysis and static balance on a wave crest or trough.

2.5 Design wave shear force

2.5.1 The design vertical wave shear force, Q_w, at any position along the ship is given by:

$Q_w = 3f_1 K_f M_{wo}/L$ kN (tonne-f)

where

K_f is to be taken as follows, *see also* Fig. 2.2.2:

(a) Positive shear force:

K_f = 0 at aft end of *L*
= $+0{,}836f_{fH}$ between 0,2*L* and 0,3*L* from aft
= $+0{,}65f_{fH}$ between 0,4*L* and 0,5*L* from aft
= $-0{,}65f_{fS}$ between 0,5*L* and 0,6*L* from aft
= $-0{,}91f_{fS}$ between 0,7*L* and 0,85*L* from aft
= 0 at forward end of *L*

(b) Negative shear force:

K_f = 0 at aft end of *L*
= $+0{,}836f_{fS}$ between 0,15*L* and 0,3*L* from aft
= $+0{,}65f_{fS}$ between 0,4*L* and 0,5*L* from aft
= $-0{,}65f_{fH}$ between 0,5*L* and 0,6*L* from aft
= $-0{,}91f_{fH}$ between 0,7*L* and 0,85*L* from aft
= 0 at forward end of *L*

Intermediate values to be determined by linear interpolation.

f_1, M_{wo}, f_{fS} and f_{fH} are defined in 2.4.1.

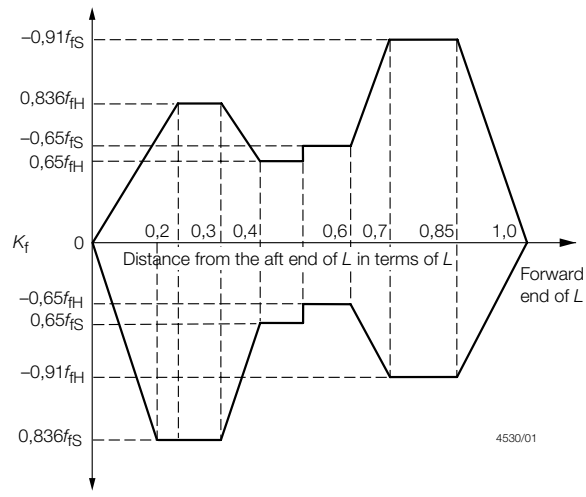

Fig. 2.2.2 Shear force factor K_f

2.6 Buckling strength

2.6.1 The buckling requirements in Pt 3, Ch 4,7 are to be applied to plate panels and longitudinals subject to hull girder compression and shear stresses. The design stresses are to be based on the design values of still water and wave bending moments and shear forces and are given in 2.4.1 and 2.5.1.

2.6.2 The standard deduction for corrosion, d_t, to be applied to plating and longitudinals is to be taken in accordance with Table 4.7.1 in Pt 3, Ch 4.

2.6.3 The buckling factors of safety, λ, to be applied to the corrected critical buckling stress, σ_{CRB}, of plate panels and longitudinals subjected to hull girder compression are given in Table 2.2.1, where the corrected critical buckling stress is to be determined in accordance with Pt 3, Ch 4,7.3

2.6.4 The shear buckling requirements of Pt 3, Ch 4,7.3 are to be applied.

Table 2.2.1 Buckling factors of safety, λ

Structural item	Buckling factor of safety, λ
Longitudinally effective plating	1,0
Longitudinal stiffeners when the buckling failure mode of the attached plating is elasto-plastic, *see* Note	1,1
Longitudinal stiffeners when the buckling failure mode of the attached plating is elastic, *see* Note	1,25
NOTE The buckling mode of failure of the attached plating is defined as follows: elastic $\sigma_E \leq 0,5\ \sigma_o$ elasto-plastic $\sigma_E > 0,5\ \sigma_o$ where σ_E = the elastic critical buckling stress, *see* Pt 3, Ch 4,7.3 σ_o = specified minimum yield stress, in N/mm^2 (kgf/mm^2)	

Section 3
Deck structure

3.1 Loading

3.1.1 In general, loadings for decks should comply with the requirements of Pt 4, Ch 1 except where specified in this Section.

3.1.2 Vehicle decks for the carriage of cars, trucks, etc., are to have a loading for wheeled vehicles as specified in Pt 3, Ch 9,3. Where vehicle decks are also used for the carriage of cargo, the loadings derived from Pt 3, Ch 9,3 are to be not less than would be required by Chapter 1.

3.1.3 For ferries and passenger ships classed **100A1**, the minimum design loadings for decks are not to be taken as less than those in Table 2.3.1.

3.1.4 For ferries and passenger ships classed **100A1** with a specified operating area service notation, the loadings for decks in way of baggage and accommodation spaces are to be in accordance with Table 2.3.1.

3.1.5 Mooring decks, afterward and forward, other than when part of the strength deck, are to comply with the requirements for forecastles, *see* Pt 3, Ch 8. Canopy decks or aprons protecting mooring decks are to be designed using the weather head for forecastle decks reduced by 0,3 m.

3.1.6 For movable decks, *see* Pt 3, Ch 9,4.

3.1.7 For train decks, the minimum design loading will be specially considered.

Table 2.3.1 Design deck loadings (ferries and passenger ships only)

Deck	Design pressures P_s, in kN/m^2 (tonne-f/m^2)	
	Secondary structures	Primary structures
Decks in way of accommodation and public spaces, *see* Note	6,38 (0,65)	3,12 (0,32)
Deck supporting baggage spaces	$3,53H_t$ ($0,36H_t$)	$3,53H_t$ ($0,36H_t$)
Decks in way of stores and refrigerated spaces	14,13 (1,44)	14,13 (1,44)
Decks in way of workshop and machinery spaces (excludes A/C machinery spaces)	18,34 (1,87)	18,34 (1,87)
Magradomes	2,45 (0,25)	2,45 (0,25)
Balconies	3,92 (0,40)	1,96 (0,20)
Weather exposed superstructure decks	2,26 (0,23)	2,26 (0,23)
Weather exposed lifeboat deck	8,44 (0,86)	8,44 (0,86)
Symbols		
H_t = tween deck height, in metres		
NOTE The design pressure, P_s, may be reduced by 12 per cent for ferries and passenger ships with a specified operating area service notation.		

Table 2.3.2 Thickness of deck plating

Deck location	Plating thickness (mm)
Accommodation and public spaces	$t = 0,008s\sqrt{k}$
Baggage handling and storage	$t = 0,009s\sqrt{k}$
Storerooms	$t = 0,01s\sqrt{k}$
Workshops and machinery spaces	$t = 0,01s\sqrt{k}$
Weather exposed lifeboat deck	$t = 0,00083s_1\sqrt{Lk} + 2,5$
The thickness of deck plating is in no case to be less than 5,0 mm.	

3.2 Deck plating

3.2.1 For ferries and passenger ships classed **100A1** the minimum thicknesses of decks are to be in accordance with Table 2.3.2.

3.2.2 For roll on-roll off cargo ships, the thickness of deck plating (other than for vehicle decks) will generally be in accordance with Pt 4, Ch 1.

3.2.3 Where decks are required to resist hull girder bending, the thickness is to satisfy the requirements of Pt 3, Ch 4,7.

3.2.4 Where deck plating is required to form the effective flange of deck primary members, the thickness may need to be increased locally taking account of the compressive forces acting, *see also* Pt 3, Ch 10, Table 10.4.1.

3.2.5 Vehicle deck plating is to satisfy the requirements for plating loaded by wheeled vehicles as specified in Pt 3, Ch 9,3. Where vehicle decks are also to be used for the carriage of cargo, the thickness of plating derived from Pt 3, Ch 9,3 is to be not less than would be required by Ch 1,4.2.

3.2.6 The thickness of all other decks will generally be in accordance with Pt 4, Ch 1.

3.3 Deck stiffening

3.3.1 For ferries, roll on-roll off cargo ships and passenger ships, the deck stiffening (other than for vehicle decks) will generally be in accordance with Chapter 1. However, in view of the complexity of some multi-deck arrangements in association with large freeboards, deck stiffening may require special consideration.

3.3.2 Vehicle deck beams and longitudinals are to have scantlings in accordance with the requirements for wheeled vehicles as specified in Pt 3, Ch 9,3. Where vehicle decks are also to be used for the carriage of cargo, the scantlings derived from Pt 3, Ch 9,3 are to be not less than would be required by Ch 1,4.3.

3.3.3 In multi-decked ships with high freeboards, the section modulus of deck beams and longitudinals is to be not less than the value given by Table 2.3.3.

Table 2.3.3 Modulus of deck beams and longitudinals for multi-decked ships with high freeboards

Position of beam/longitudinal	Modulus, in cm^3
Decks, excluding those for the stowage of cargo or vehicles	$Z = 0{,}00083 f_R P_s l_e^2 s k$ $(Z = 0{,}0081 f_R P_s l_e^2 s k)$ but not less than: $Z = 0{,}025 s$
Symbols	
l_e, s, Z, and k as defined in Ch 1,1.5 P_s = deck loading in kN/m^2 (tonne-f/m^2), *see* Table 2.3.1 f_R = 1, for ships with unrestricted service f_R = 0,81 for ships with a specified operating area service notation	

3.4 Deck supporting primary structure

3.4.1 The section modulus of primary members supporting four or more point loads or a uniformly distributed load is not to be taken as less than:

$$Z = 0{,}673\, S\, P_s\, k\, l_e^2 \quad (\text{cm}^3)$$

$$(Z = 6{,}60\, S\, P_s\, k\, l_e^2) \quad (\text{cm}^3)$$

where

l_e, S, Z and k are as defined in Ch 1,1.5

P_s = deck design loading, in kN/m^2 (tonnes/m^2), *see* Table 2.3.1.

3.4.2 The moment of inertia of primary members supporting more than four point loads is not to be taken as less than:

$$I = \frac{1{,}85}{k}\, l_e Z \quad (\text{cm}^4)$$

Z and l_e as defined in 3.4.1.

3.4.3 Scantlings of primary structure are to be verified for the following cases using direct calculation methods.

(a) The structural support arrangement is complex either due to arrangement or loading pattern.

(b) Large openings are incorporated in the webs of primary members.

(c) The structure is of novel or unusual design.

The stress criteria in Pt 4, Ch 1, Table 1.4.6 are to be complied with.

3.4.4 For passenger ships direct calculations should be carried out generally in accordance with the SDA procedure.

3.4.5 For roll on-roll off cargo ships and passenger ships and passenger/vehicle ferries with large vehicle stowage spaces, *see* 5.1.5.

3.4.6 Vehicle deck structure is to be of adequate strength for the upward forces imposed at fixed securing points. Local reinforcement is to be fitted as necessary.

■ *Section 4* Shell envelope plating

4.1 Bottom and side shell

4.1.1 For ferries and passenger ships classed **100A1** with a specified operating area service notation the keel thickness for 0,4*L* amidships is to be as required by Ch 1,5. At ends, the keel thickness may be reduced by 25 per cent from the above value, but is to be not less than that of the adjacent shell plating.

4.1.2 The thickness of side shell plating above 1,6*T* including superstructures may require special consideration depending on the particular structural arrangement, hull vertical bending and shear stresses and position of the shell above the waterline. In no case are the shell scantlings above 1,6*T* be less than the following:

(a) $t_{zm} = t_{shell} - (Z_m - 1{,}6T)(0{,}24 + 0{,}0012L)\sqrt{\dfrac{k\,s_1}{s_b}}$

(b) $t_{zm} = (4 + 0{,}02L)\sqrt{\dfrac{k\,s_1}{s_b}}$

(c) as required by Pt 3, Ch 8

where

t_{shell} = minimum required shell thickness above D/2 for the specific location, as calculated in Pt 4, Ch 1,5

t_{zm} = minimum shell thickness at Z_m

Z_m = vertical height in metres above base

L and *T* as defined in Pt 3, Ch1,1.5.

s_1, s_b as defined in Table 5.3.1 in Pt 3, Ch 5 for fore end or Table 6.3.1 in Chapter 6 for aft end.

4.1.3 Openings in the side shell and superstructure plating for windows and doors are to be suitably stiffened and the thickness and grade of plating in way will be specially considered.

4.1.4 For ships with broad flat counter stern sections which are liable to be subjected to large wave impact loading, the effect of wave impact loading on the plating and framing of the local shell structure is to be additionally considered, *see* 4.3 and 5.2.

4.1.5 The plating and framing of the forward shell structure for ships with significant bow flare is to be additionally considered with regard to wave impact loading, *see* 4.3 and 5.2.

4.1.6 The minimum thickness of the shell plating at ends and for taper is to be not less than the values given in Table 2.4.1, and is in no case to be less than 6 mm.

4.1.7 For ferries and passenger ships classed **100A1** with a specified operating area service notation, the bottom and side shell minimum thickness at ends may be taken 20 per cent less than that required by Table 2.4.1 and Pt 3, Ch 5 and Ch 6, but is in no case to be less than 6 mm.

Table 2.4.1 End shell thickness

Scantling length	Thickness, in mm
70 m and below	$(6{,}5 + 0{,}033L)\sqrt{\dfrac{k\,s_1}{s_b}} - 1{,}0$
Between 70 m and 110 m	$(6{,}5 + 0{,}033L)\sqrt{\dfrac{k\,s_1}{s_b}} - 0{,}5$
Over 110 m	Pt 3, Ch 5 and Ch 6
Symbols	
L as defined in Pt 3, Ch 1,1.5 s_1, s_b as defined in Table 5.3.1 in Pt 3, Ch 5 for fore end or Table 6.3.1 in Chapter 6 for aft end.	

4.2 Bow flare and wave impact pressures

4.2.1 The bow flare wave impact pressure and wave impact pressure on other parts of the side shell plating close to and above the design waterline, P_{bf} , in kN/m^2 due to relative motion is to be taken as:

$$P_{bf} = 0{,}5\,(K_{bf}\,V_{bf}^2 + K_{rv}\,H_{rv}\,V_{rv}^2) \quad \text{kN/m}^2$$

where

K_{bf} = hull form shape coefficient for wave impacts

$= \dfrac{\pi}{\tan\beta_p}$ for $\beta_p \geq 10$

$= 28\,(1 - \tan(2\beta_p))$ for $\beta_p < 10$

V_{bf} = wave impact velocity, in m/s, and is given by

$= \sqrt{V^2_{thbf} + 2m_1\,\ln(N_{bf})}$ for $N_{bf} \geq 1$

$= 0$ for $N_{bf} < 1$

V_{thbf} = threshold velocity for wave impact, in m/s, to be taken as:

$= \dfrac{\sqrt{10}}{\cos\alpha_p}$

ln ( ) is the natural logarithm

N_{bf} = No. of wave impacts in a three hour period and is given by

$= 1720\,PR_{bf}\sqrt{\dfrac{m_1}{m_0}}$

PR_{bf} = probability of a wave impact and is given by

$= e^{-u}$

$u = \left(\dfrac{Z^2_{wl}}{2m_0} + \dfrac{V^2_{thbf}}{2m_1}\right)$

Z_{wl} = distance of the centroid of the area of plating or stiffener above the local design waterline

m_1 = variance of the relative vertical velocity

$= 0{,}25(\omega_e\,f_{sl}\,H_{rm})^2$

m_0 = variance of the relative vertical motion

$= 0{,}25\,(f_{sl}\,H_{rm})^2$

ω_e = effective encounter wave frequency

$= \omega\left(1 + \dfrac{0{,}4\omega\,V_{sl}}{g}\right)$

ω = effective wave frequency based on 80 per cent ship length

$= \sqrt{\dfrac{2\pi\,g}{0{,}8L_{WL}}}$

f_{sl} = probability level correction factor for relative vertical motion

$= 1{,}2$

V_{sl} = 0,515*V*, in m/s

K_{rv} = hull form shape coefficient for impact due to forward speed

$= \dfrac{\pi}{\tan(90 - \alpha_p)}$ for $\alpha_p \leq 80$

$= 28\,(1 - \tan(2\,(90 - \alpha_p)))$ for $\alpha_p > 80$

H_{rv} = relative wave heading coefficient

$= 1$ for $\gamma_p > 45$

$= \cos(45 - \gamma_p)$ for $\gamma_p \leq 45$

V_{rv} = relative forward speed, in m/s

$= 0{,}515V\sin\gamma_p$

α_p = buttock angle measured in the longitudinal plane, in degrees, *see* Fig. 2.4.1

β_p = flare angle measured in the transverse plane, in degrees, *see* Fig. 2.4.1. For bow flare regions where the bow is non prismatic, i.e. changing rapidly, then β may be taken as the maximum of α or β

γ_p = waterline angle measured in the horizontal plane, in degrees, *see* Fig. 2.4.1.

NOTE

Where only two angles are known and are measured in orthogonal planes, then the third angle may be obtained by the following expression:

$$\alpha_p = \tan^{-1}(\tan\beta_p \tan\gamma_p)$$

The relative vertical motion, H_{rm}, is to be taken as

$$H_{rm} = C_{w,min}\left(1 + \frac{4,5}{(C_b + 0,2)}\left(\frac{x_{wL}}{L_{wL}} - x_m\right)^2\right)$$

where

$$C_{w,min} = \frac{C_w}{\sqrt{2}\,k_m}$$

C_w = a wave head in metres

$= 0,0771 L_{WL}(C_b + 0,2)^{0,3}\, e^{(-0,0044 L_{WL})}$

$$k_m = 1 + \frac{4,5\,(0,5 - x_m)^2}{(C_b + 0,2)}$$

x_m = $0,45 - 0,6F_n$ but is not to be less than 0,2

$$F_n = \frac{0,515V}{\sqrt{g\,L_{WL}}}$$

L_{WL} = waterline length at summer load draught

x = longitudinal distance, in metres, measured forwards from the aft end of the L_{WL} to the location being considered

V = speed, in knots, as defined in 1.5.1 for bow locations

V = 0 for stern locations

C_b = Rule block coefficient

If the area of plating under consideration has a waterline angle which is re-entrant or decreasing, e.g. in the stern region, then the relative wave heading coefficient, H_{rv}, and the speed V used in the derivation of H_{rm}, are to be taken as zero.

4.2.2 Alternatively, P_{bf} may be derived by the direct calculations carried out in accordance with a procedure agreed by LR.

4.3 Strengthening for wave impact loads

4.3.1 The shell envelope in the forward and after portions of the hull are to be strengthened against bow flare or wave impact pressure. Typically, strengthening is to be considered over the following areas:

- over the after body in way of a flat counter stern which is close to the waterline;
- over the fore end side and bow structure above the waterline and up to the deck at side;
- other areas where the hull exhibits significant flare.

4.3.2 The thickness of the side shell plating is to be not less than:

$$t = 3,2 s_c \sqrt{k\,h_s}\, C_R \times 10^{-2} \text{ mm}$$

where

s_c = is the length of the shorter edge of a plating panel framed by primary and secondary members, *see* Fig. 2.4.2

h_s = equivalent wave impact head, in metres

h_s = $0,1P_{bf}$ m

P_{bf} = is defined in 4.2.1

C_R = panel ratio factor

C_R = $\left(\frac{l}{s_c}\right)^{0,41}$ but is not to be taken less than 0,06 or greater than 0,1

l = overall panel length, in metres, measured along a chord between the primary members.

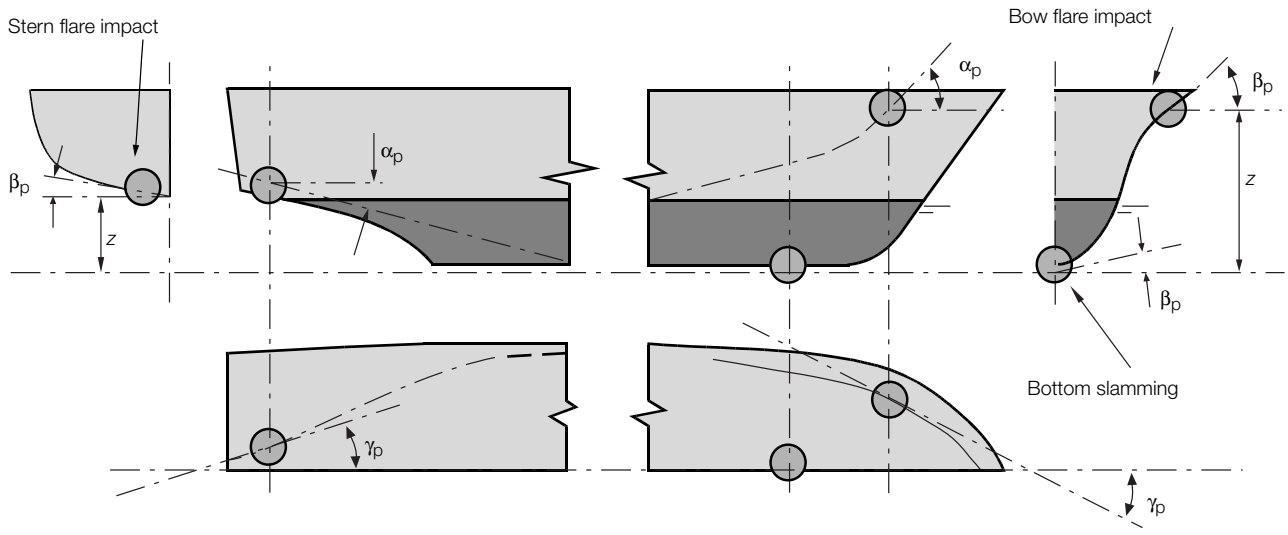

Fig. 2.4.1 Bow flare and bottom slamming angles

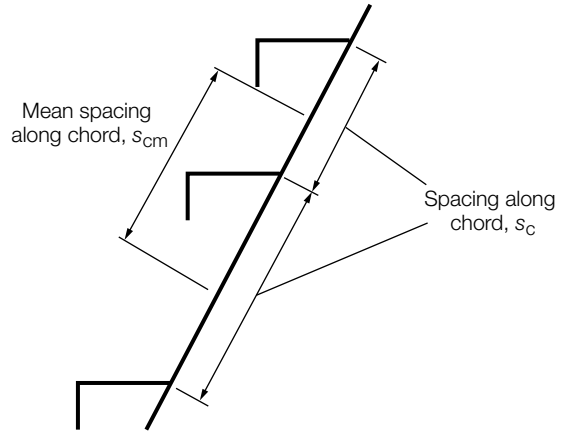

Fig. 2.4.2
Chord spacing and mean chord spacing for secondary members

4.3.3 The structural scantlings required in areas strengthened against bow flare slamming are to be tapered to meet the normal shell envelope requirements.

4.3.4 The side structure scantlings required by this Section must in no case be taken less than those required by the remaining Sections of Chapter 2.

■ *Section 5* Shell envelope framing

5.1 Side structure

5.1.1 The scantlings of frames, or side longitudinals, web frames or transverses, and stringers below 1,6*T* above base are to satisfy the requirement of Pt 4, Ch 1 and this Section, but may be required to be confirmed by direct calculation. The scantlings of these members above 1,6*T* from base may require special consideration on the basis of the particular structural arrangements, design deck loading, hull vertical bending stresses, and position of the member above the waterline.

5.1.2 The scantlings of side transverses supporting shell longitudinals above 1,6*T* are to satisfy the requirements of:

(a) Pt 4, Ch 1,6, Pt 3, Ch 5,4 and Pt 3, Ch 6,4.

(b) The minimum geometric properties required in order to provide rotational constraint to the end of the deck transverse in way:

$$Z_s = \frac{0{,}677 S\, k\, P_s\, L_d^3}{\left(\left(\frac{I_d}{I_s}\right) L_s + L_d\right)} \text{ cm}^3$$

but is not to be less than $0{,}339 S\, k\, P_s\, L_d^2$ cm^3

I_s is not to be less than $I_d \left(\frac{L_s}{L_d}\right)\left(\frac{Z_{dR}}{Z_d}\right)$ cm^4

where

P_s = deck design loading, in kN/m^2, *see* Table 2.3.1
L_d = span of adjacent deck transverse, in metres
Z_d = actual modulus of adjacent deck transverse, in cm^3
Z_{dR} = Rule modulus of adjacent deck transverse, in cm^3
I_d = moment of inertia of adjacent deck transverse, in cm^4
L_s = span of side shell transverse, in metres
I_s = moment of inertia of side shell transverse, in cm^4
S, k = as defined in 1.5.1

Due account should be taken of the shell window dimensions when determining the effective width of attached plating.

5.1.3 The required modulus of transverse main and 'tween deck frames, which may have reasonably constant convex curvature over their entire length, may be corrected for curvature as follows:

$$Z_{min} = Z_{rule} \left(\frac{1}{\cosh\left(\frac{2\pi Y_c}{l_e}\right)}\right)^3 \text{ cm}^3$$

where

Z_{rule} = modulus requirement, in cm^3, from Pt 4, Ch 1 using l_e
l_e = distance between span support points, in metres, as shown in Fig. 2.5.1
Y_c = curvature measured from a line intersecting the end support points to the frame at mid-span, in metres, as shown in Fig. 2.5.1
Z_{min} = is not to be less than $0{,}5 Z_{rule}$.

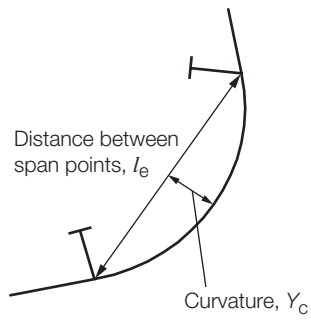

Fig. 2.5.1
Distance between span support points and curvature

5.1.4 Where ramp openings are fitted adjacent to the ship's side, adequate support for the side framing is to be provided.

5.1.5 Where bulkheads are omitted as indicated by 1.2.3, the strength of the structure is to be verified by direct calculation. The direct calculation procedure is to be agreed with LR.

5.2 Strengthening for wave impact loads

5.2.1 The side structure in the forward and after portions of the hull is to be strengthened against bow flare or wave impact pressure. Typically, strengthening is to be considered over the following areas:

- over the after body in way of a flat counter stern which is close to the waterline.
- over the fore end side and bow structure above the waterline and up to the deck at side.
- other areas where the hull exhibits significant flare.

5.2.2 The scantlings of secondary stiffeners are not to be less than:

(a) Effective plastic section modulus of stiffeners:

$$Z_p = 3{,}75 h_s s_{cm} k l_e^2 \times 10^{-3} \quad \text{cm}^3$$

where

h_s = wave impact head, in metres, as defined in 4.3.2

s_{cm} = mean spacing of secondary stiffeners, in mm, measured along a chord between parallel adjacent members or equivalent supports, as shown in Fig. 2.4.2

Other symbols are as defined in 1.5.2.

(b) Web area of secondary stiffeners

$$A = 3{,}7 s_{cm} k h_s \left(l_e - \frac{s_{cm}}{2000}\right) \times 10^{-4} \quad \text{cm}^2$$

where

s_{cm} = mean spacing of secondary stiffeners, in mm, measured along a chord between parallel adjacent members or equivalent supports, as shown in Fig. 2.4.2

h_s = wave impact head, in metres, as defined in 4.3.2

Other symbols are as defined in 1.5.2.

5.2.3 The effective section properties of secondary stiffeners are to be taken as:

(a) Plastic section modulus of secondary stiffeners, Z_p, is to be taken as:

$$Z_p = 2{,}8 \times 10^{-4} s_{cm} t_p^2 - 10^{-3} b_f b_{fc} t_f \sin\theta_e + 5 \times 10^{-4} (h_w^2 t_w + 2 b_f t_f h_w) \cos\theta_e \quad \text{cm}^3$$

where

θ_e = $C_0 (90 - \varphi)$

C_o = 1,1

φ = the angle between the stiffener and the side shell, in degrees

b_{fc} = $0{,}5 (b_f - t_w)$ for L profiles

= 0 for flat bar and T profiles

= *see* Fig. 4.7.1 in Pt 3, Ch 4, for bulb profiles

h_w = height of stiffener, in mm

t_w = web thickness, in mm

b_f = breadth of flange, in mm

t_f = flange thickness, in mm

t_p = thickness of attached plating, in mm

(b) Web area of secondary stiffeners, A_s, is to be taken as:

$$A_s = 0{,}01 (h_w + t_p) t_w \sin\varphi \quad \text{cm}^2$$

5.2.4 Where the stiffener web is not perpendicular to the plating, tripping brackets have to be fitted in order to obtain adequate lateral stability.

5.2.5 The scantlings of primary members are not to be less than:

(a) Section modulus of primary members

$$Z = 2 \gamma_Z k h_s q v l_e^2 \quad \text{cm}^3$$

(b) Web area of primary members

$$A = 0{,}2 \gamma_A k h_s q v l_e \quad \text{cm}^2$$

where

h_s = wave impact head, in metres, as defined in 4.3.2

and

γ_A and γ_Z are strength factors dependent on the load position

for $q < 1$ $\gamma_A = q^3 - 2q^2 + 2$ and $\gamma_Z = 3q^3 - 8q^2 + 6q$

for $q = 1$ $\gamma_A = 1$ and $\gamma_Z = 1$

$$q = \frac{u}{l_e} \text{ but} \le 1$$

for web frames:

u is the minimum of g_{bfv} or l_e

v is the minimum of g_{bfh} or S_{cm}

for primary stringers:

u is the minimum of g_{bfh} or l_e

v is the minimum of g_{bfv} or S_{cm}

where

l_e is the effective length of the primary member, in metres

S_{cm} is the mean spacing between primary members along the plating, in metres, *see* Fig. 2.5.2

g_{bfv} and g_{bfh} are defined in 5.2.6

Other symbols are as defined in 1.5.2.

(c) The web of the primary member is to be adequately stiffened

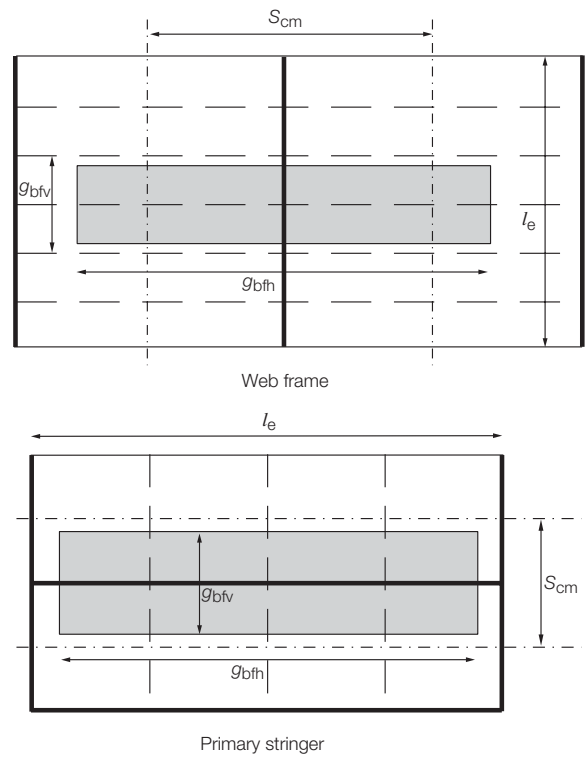

Fig. 2.5.2
Mean spacing between primary members, S_{cm}, and the extents of wave impact pressure g_{bfh} and g_{bfv}

5.2.6 The extents of the wave impact pressure are to be derived as follows:

(a) the vertical extent, g_{bfv}, is to be taken as:

$$g_{bfv} = \frac{4}{\sin \beta_p \sqrt{8K_{bf}}} \text{ m}$$

(b) the horizontal extent, g_{bfh}, is to be taken as:

$$g_{bfh} = 4 \text{ m}$$

where

K_{bf} and β_p are given in 4.2.1.

5.2.7 For primary members with cut-outs for the passage of secondary stiffeners, and which may have web stiffeners connected to the secondary stiffener, buckling checks are to be carried out to ensure that the primary member web plating and web stiffener will not buckle under the design load. The buckling procedure to be followed is given in Table 5.1.3 in Pt 3, Ch 5. Where the web stiffener is fitted with a bracket, the buckling capability of the web stiffener in way of the cut-out is to take account of the bracket. Where no web stiffener is fitted, the buckling capability of the primary member web plating is to be checked for the total load transmitted to the connection.

5.2.8 Where the angle between the primary structure web and the plating is less than 70°, the effective section modulus and shear area are to take account of the non-perpendicularity.

5.2.9 The structural scantlings required in areas strengthened against bow flare slamming are to be tapered to meet the normal shell envelope requirements.

5.2.10 The side structure scantlings required by this Section must in no case be taken less than those required by the remaining Sections of Chapter 2.

■ *Section 6* Double bottom

6.1 General

6.1.1 In passenger ships (*see* 1.1) a double bottom is to be fitted extending from the forepeak bulkhead to the afterpeak bulkhead as far as this is practicable and compatible with the design and proper working of the ship, however:

(a) In ships of 50 m and upwards but less than 61 m in length a double bottom is to be fitted at least from the machinery space to the forepeak bulkhead, or as near thereto as practicable.

(b) In ships of 61 m and upwards but less than 76 m in length a double bottom is to be fitted at least outside the machinery space, and is to extend to the fore and after peak bulkheads, or as near thereto as practicable.

(c) In ships of 76 m in length and upwards, a double bottom is to be fitted amidships, and is to extend to the fore and after peak bulkheads, or as near thereto as practicable.

(d) A double bottom need not be fitted in way of watertight compartments of moderate size used exclusively for the carriage of liquids, provided the safety of the ship, in the event of bottom or side damage, is not impaired.

(e) Subject to the provisions stipulated in the relevant Regulations of the *International Convention for the Safety of Life at Sea, 1974* including the 1981 amendments, any deviations from the above requirements will be specially considered.

6.1.2 Where a double bottom as required by 6.1.1 is fitted, its depth is to be compatible with the requirements of Ch 1,8 and the inner bottom is to be continued out to the ship's sides in such a manner as to protect the bottom to the turn of bilge. Such protection will be deemed satisfactory if the line of intersection of the outer edge of the margin plate with the bilge plating is not lower at any part than a horizontal plane passing through the point of intersection with the frame line amidships of a transverse diagonal line inclined at 25° to the base line and cutting it at a point one-half the ship's moulded breadth from the middle line, *see* Fig. 2.6.1.

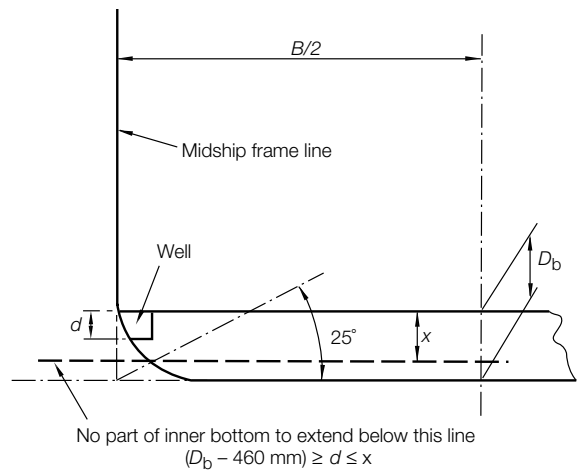

Fig. 2.6.1 Inner bottom and well position

6.1.3 Small wells constructed in the double bottom in conjunction with drainage arrangements of holds, etc., are not to extend downwards more than necessary. The depth of the wells is to be at least 460 mm less than the depth of the double bottom at the centreline, and the well is not to extend below the horizontal plane referred to in 6.1.2. A well extending to the outer bottom is, however, permitted at the after end of the shaft tunnel. Other well arrangements (e.g. for lubricating oil under main engines) will be considered provided they give protection equivalent to that afforded by the double bottom.

6.1.4 Where podded drive systems are to be employed, adequate floors and girders are to be arranged in order to efficiently integrate the unit into the aft structure. The adequacy of the hull structure supporting the unit is to be verified using the maximum external forces and moments stated by the manufacturer. Due account is to be taken of additional forces induced by ship motion accelerations.

6.2 Transmission of pillar loads

6.2.1 In ships where the deck centreline supports are widely spaced, transmission of the pillar loads to the double bottom structure will be specially considered, and additional reinforcement may be required if high shear and bending stresses are induced by the concentrated loads. The reinforcement should take the form of additional floors, and fore and aft girders. The final reinforcement is to be confirmed by direct calculation.

6.2.2 Where, in multi-decked passenger ships, the rule deck loadings from Table 2.3.1 have been used to determine the primary deck supporting structure, the cumulative pillar load P_p may be taken as:

$$P_p = \Sigma (b_p S_p) P_s \quad \text{kN}$$

where

b_p = breadth of deck supported by pillar

S_p = mean spacing between pillars

P_s *see* Table 2.3.1.

6.2.3 Pillars are to be provided with suitable pads at their heels. Long pillars, and those terminating at the inner bottom are to be bracketed. At pillar heads, the free edges of deck primary structure face plates are to be at least 20 mm clear of the pillar head attachment weld. Where necessary, gusset plates are to be fitted at primary member intersections in way of pillars. These gussets may be applied as doublers onto the primary member face plates and should be at least equal in thickness to the pillar or the face plate, whichever is greater. Where pillars act in tension, the gussets are to be integral with the primary member face plates. The axial stress in tensile pillars is not to exceed 110/k N/mm^2 and full penetration welds are to be arranged in way of the end connections.

6.3 Ferries and passenger ships with a specified operating area service

6.3.1 The thickness of double bottom centre girders may be reduced by 10 per cent, and the thickness of double bottom side girders and floors may be reduced by five per cent, from the values required by Ch 1,8, but is in no case to be less than 6 mm.

■ *Section 7*
Peak, watertight and deep tank bulkheads

7.1 General

7.1.1 The scantlings of watertight and deep tank bulkheads are to comply with the requirements of Pt 4, Ch 1.

7.1.2 The load head, h_4 to be used in watertight bulkhead scantlings for passenger ships is, in addition, to comply with the following:

- For watertight bulkhead plating, the distance from a point one-third of the height of the plate above its lower edge to a point 0,91 m above the bulkhead deck at side, or to the deepest intermediate/equilibrium waterline in damaged condition obtained from applicable damage stability calculations, whichever is the greater.
- For watertight bulkhead stiffeners or girders, the distance from the middle of the effective length to a point 0,91 m above the bulkhead deck at side, or to the deepest intermediate/equilibrium waterline in damaged condition obtained from applicable damage stability calculations, whichever is the greater.

7.1.3 Partial watertight bulkheads and webs fitted above the bulkhead deck which are to be included in damage stability calculations, are to be assessed as watertight, *see* 7.1.2.

7.2 Ferries and passenger ships with a specified operating area service

7.2.1 The thickness of bulkhead plating for peak tanks and deep tanks, other than the collision bulkhead, may be reduced by 0,5 mm, and the modulus of bulkhead stiffeners, swedges, corrugations and girders may, in general, be reduced by 20 per cent from the values required by Ch 1,9.

■ *Section 8*
Bow doors and inner doors

8.1 Symbols

8.1.1 The symbols used in this Section are defined as follows:

a = vertical distance, in metres, from the bow door pivot to the centroid of the vertical projected area of bow door, *see* Fig. 2.8.1

b = horizontal distance, in metres, from the bow door pivot to the centroid of the horizontal projected area of the bow door, *see* Fig. 2.8.1

c = horizontal distance, in metres, from bow door pivot to centre of gravity of bow door, *see* Fig. 2.8.1

d = vertical distance, in metres, from bow door pivot to the centre of gravity of the bow door, *see* Fig. 2.8.1

h = height of the door, in metres, between the levels of the bottom of the door and the upper deck or between the bottom of the door and the top of the door, whichever is the lesser, *see* Fig. 2.8.2

k = material factor (*see* Pt 3, Ch 2,1.2), but is not to be taken less than 0,72 unless demonstrated otherwise by a direct strength analysis with regard to relevant modes of failure

l = projected length, in metres, of the door at a height of $\frac{h}{2}$ above the bottom of the door, *see* Fig. 2.8.2

w = width of bow door at half height, in metres

A_z = area, in m^2, of the horizontal projection of the bow door, between the bottom of the door and the top of the upper deck bulwark, or between the bottom of the door and the top of the door, including the bulwark, where it is part of the door, whichever is the lesser, *see* Fig. 2.8.1. Where the flare angle of the bulwark is at least 15 degrees less than the flare angle of the adjacent shell plating, the height from the bottom of the door may be measured to the upper deck or to the top of the door, whichever is the lesser.

A_s = area of stiffener web, in cm^2

A_x = area, in m^2, of the transverse vertical projection of the bow door, between the bottom of the door and the top of the door or between the bottom of the door and the upper deck bulwark, or between the bottom of the door and the top of the door, including the bulwark, where it is part of the door, whichever is the lesser, *see* Fig. 2.8.1. Where the flare angle of the bulwark is at least 15 degrees less than the flare angle of the adjacent shell plating, the height from the bottom of the door may be measured to the upper deck or to the top of the door, whichever is lesser. In determining the height from the bottom of the door to the upper deck or to the top of the door, the bulwark is to be excluded.

A_y = area, in m^2, of the longitudinal vertical projection of the bow door, between the bottom of the door and the top of the upper deck bulwark, or between the bottom of the door and the top of the door, including the bulwark, where it is part of the door, whichever is the lesser, *see* Fig. 2.8.1. Where the flare angle of the bulwark is at least 15 degrees less than the flare angle of the adjacent shell plating, the height from the bottom of the door may be measured to the upper deck or to the top of the door, whichever is the lesser.

W = weight of bow visor, in tonnes

q = distance, in metres, from the centroid of the hydrostatic head profile, to the top of the cargo space

C_H = 0,0125L where L < 80 m
= 1,0 where $L \geq 80$ m

L = length of ship, but need not be taken greater than 200 m

V as defined in 1.5.1

λ = coefficient depending on the area where the ship is intended to be operated
= 1,0 for seagoing ships
= 0,8 for ships operated in coastal waters
= 0,5 for ships operated in sheltered waters

σ = bending stress, in N/mm^2 (kgf/mm^2)

σ_e = equivalent stress, in N/mm^2 (kgf/mm^2)
= $\sqrt{\sigma^2 + 3\tau^2}$

σ_y = yield stress of the bearing material, in N/mm^2 (kgf/mm^2)

τ = shear stress, in N/mm^2 (kgf/mm^2).

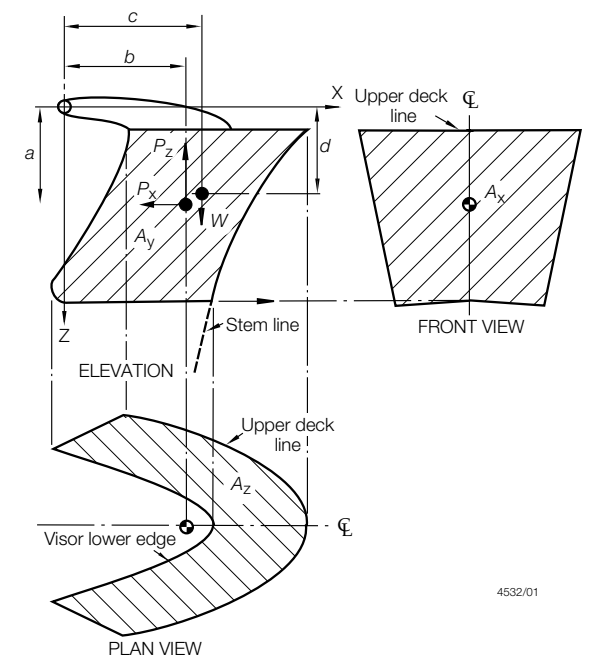

Fig. 2.8.1 Bow door (upward hinging)

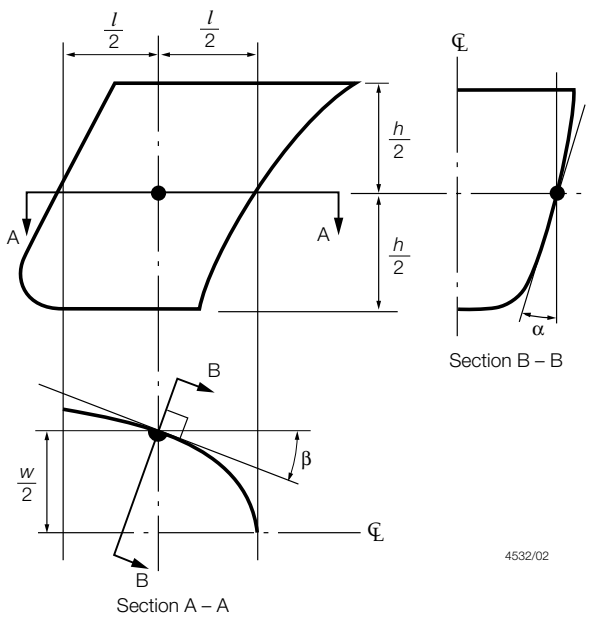

Fig. 2.8.2 Definition of α and β

8.2 General

8.2.1 Bow doors are defined by the following types:

(a) Visor doors opened by rotating upwards and outwards about a horizontal axis through two or more hinges located near the top of the door and connected to the primary structure of the door by longitudinally arranged lifting arms.

(b) Side-opening doors opened either by rotating outwards about a vertical axis through two or more hinges located near the outboard edges or by horizontal translation by means of linking arms arranged with pivoted attachments to the door and the ship. It is expected that side-opening bow doors will be arranged in pairs.

Other bow door types will be specially considered.

8.2.2 Bow doors are to be situated above the freeboard deck. A watertight recess in the freeboard deck located forward of the collision bulkhead and above the deepest waterline, fitted for arrangement of ramps or other related mechanical devices, may be regarded as a part of the freeboard deck for the purpose of this requirement.

8.2.3 Where bow doors lead to a complete or long forward enclosed superstructure, or to a long non-enclosed superstructure which is fitted to attain minimum bow height equivalence, an inner door is to be fitted. The inner door is to be part of the collision bulkhead. Where a sloping vehicle ramp forming the collision bulkhead above the freeboard deck is arranged, the inner door may be omitted if the ramp is weathertight over its complete length and fulfils the requirements of Pt 3, Ch 3 concerning the position of the collision bulkhead.

8.2.4 Bow doors are to be fitted with arrangement for ensuring weathertight sealing, such as gaskets, and to give effective protection to inner doors.

8.2.5 Inner doors forming part of the collision bulkhead are to be watertight over the full height of the cargo space and arranged with fixed sealing supports on the aft side of the doors.

8.2.6 Bow doors and inner doors are to be arranged so as to preclude the possibility of the bow door causing structural damage to the inner door or to the collision bulkhead in the case of damage to or detachment of the bow door. If this is not possible, a second separate inner weathertight door, complying with 8.2.5, is to be installed.

8.2.7 The requirements for inner doors are based on the assumption that vehicles and cargo are effectively lashed and secured against movement from the stowed position.

8.2.8 For ships complying with the requirements of this Section, the securing, supporting and locking devices are defined as follows:

(a) A securing device is used to keep the door closed by preventing it from rotating about its hinges.

(b) A supporting device is used to transmit external and internal loads from the door to a securing device and from the securing device to the ship's structure, or a device other than a securing device, such as a hinge, stopper or other fixed device, that transmits loads from the door to the ship's structure.

(c) A locking device locks a securing device in the closed position.

8.2.9 The scantlings and arrangements of side shell and stern doors are to be in accordance with the requirements of Pt 3, Ch 11,8.

8.3 Scantlings

8.3.1 The strength of the bow door is to be equivalent to the surrounding structure, as given in Pt 3, Ch 5,6.

8.3.2 For bow doors, including bulwark, of unusual form or proportions, the areas and angles used for the determination of design values of external forces are to be specially considered.

8.3.3 Bow doors of the visor or hinged opening type are to be adequately stiffened, and means are to be provided to prevent lateral or vertical movement of the doors when closed. Care is to be taken to ensure that adequate strength is provided in the connections of the hinge or linking arms to the door structure and to the ship structure.

8.3.4 The thickness of the bow door plating is not to be less than the side shell plating calculated with the door stiffener spacing, and in no case to be less than the minimum shell plate end thickness or forecastle side thickness as appropriate.

8.3.5 The section modulus of horizontal or vertical stiffeners is not to be less than required for end framing. Consideration is to be given, where necessary, to differences in fixity between ship frames and bow door stiffeners.

8.3.6 The stiffener webs are to have a net sectional area not less than:

$$A_s = \frac{10Q}{\tau} \text{ cm}^2$$

τ is to be taken as $\frac{100}{k}$ N/mm^2 $\left(\frac{10,2}{k} \text{ kgf/mm}^2\right)$

where

Q = shear force, in kN (tonne-f) calculated using the uniformly distributed external sea pressure, p_e, defined in 8.5.15.

8.3.7 Bow door secondary stiffeners are to be supported by primary members constituting the main stiffening elements of the door.

8.3.8 The scantlings of such primary members are to be based on direct strength calculations. Normally, formulae for simple beam theory may be applied to determine the bending stress. Members are to be considered to have simply supported end connections. The design load, P_e, is the uniformly distributed external sea pressure. The formulae for P_e given in 8.6.1, may be used with α and β defined as:

α = flare angle, in degrees, generally to be measured normal to the shell between the vertical axis and the vertical tangent to the outer shell of the door measured at the point on the bow door, one half of the projected length (l/2) aft of the stern line on the plane at the half height of the door (h/2) (*see* Fig. 2.8.2)

β = entry angle, in degrees, generally to be measured on the outer shell of the door between the longitudinal axis and the waterplane tangent measured at the point on the bow door, one half of the projected length (l/2) aft of the stem line on the plane at the half height of the door (h/2) (*see* Fig. 2.8.2)

The permissible stresses are as follows:

$$\tau = \frac{80}{k} \text{ N/mm}^2 \quad \left(\frac{8,2}{k} \text{ kgf/mm}^2\right)$$

$$\sigma = \frac{120}{k} \text{ N/mm}^2 \quad \left(\frac{12,2}{k} \text{ kgf/mm}^2\right)$$

$$\sigma_e = \frac{150}{k} \text{ N/mm}^2 \quad \left(\frac{15,3}{k} \text{ kgf/mm}^2\right)$$

8.3.9 The webs of primary members are to be adequately stiffened, preferably in a direction perpendicular to the shell plating.

8.3.10 The primary members of the bow doors and hull structure in way are to have sufficient stiffness to ensure the integrity of the boundary support of the doors.

8.3.11 All load transmitting elements in the design load path, from door through securing arrangements and supporting devices into the ship structure, including welded connections, are to be to the same strength standard. These elements include pins, supporting brackets and back-up brackets. Where cut-outs are made in the supporting structure, the strength and stiffness will be specially considered.

8.3.12 For bow doors and inner doors, the distribution of forces acting on the securing devices and the supporting devices is to be supported by direct calculations taking into account the flexibility of the structure and the actual position and stiffness of the supports.

8.3.13 The buckling strength of primary members is to be specially considered.

8.4 Vehicle ramps

8.4.1 Where doors also serve as vehicle ramps, the scantlings are to be not less than would be required by 3.2.2 and 3.3.2 and where they form part of the collision bulkhead the arrangement is to be in accordance with Pt 3, Ch 3,4.5.

8.5 Arrangements for the closing, securing and supporting of doors

8.5.1 Bow doors are to be fitted with adequate means of closing, securing and supporting so as to be commensurate with the strength and stiffness of the surrounding structure. The hull supporting structure in way of the bow doors is to be suitable for the same design loads and design stresses as the securing and supporting devices. Where packing is required, the packing material is to be of a comparatively soft type, and the supporting forces are to be carried by the steel structure only. Maximum design clearance between securing and supporting devices is not to exceed 3 mm.

8.5.2 Securing devices are to be simple to operate and easily accessible. They are to be of a design approved by LR for the intended purpose.

8.5.3 Securing devices are to be equipped with positive locking arrangements. Arrangements are to be such that the devices are retained in the closed position within design limits of inclination, vibration and other motion-induced loads and in the event of loss of any actuating power supply.

8.5.4 Systems for door opening/closing and securing/locking are to be interlocked in such a way that they can only operate in a proper sequence. Hydraulic systems are to comply with Pt 5, Ch 14,9.

8.5.5 Means are to be provided to enable the bow doors to be mechanically fixed in the open position taking into account the self weight of the door and a minimum wind pressure of 1,5 kN/m^2 (0,153 tonne-f/m^2) acting on the maximum projected area in the open position.

8.5.6 The spacing for side and top cleats should not exceed 2,5 m and there should be cleats positioned as close to the corners as practicable. Alternative arrangements for ensuring weathertight sealing will be specially considered.

8.5.7 Control and monitoring arrangements are to comply with Pt 6, Ch 2,18.

8.6 Design of securing and supporting devices

8.6.1 The external design forces for securing devices, supporting devices and surrounding structure are to be taken not less than P, taking the direction of the pressure into account:

$P_x = A_x p_e$
$P_y = A_y p_e$
$P_z = A_z p_e$

where

p_e = external sea pressure, not to be taken less than:

(a) For bow doors:

$$p_e = 0,8\,(0,15V + 0,6\sqrt{L})^2 \quad \text{kN/m}^2$$

$$\left(0,082\,(0,15V + 0,6\sqrt{L})^2 \quad \text{tonne-f/m}^2\right)$$

or

$$p_e = 2,75\lambda\, C_H\,(0,22 + 0,15\tan\alpha)\,(0,4V\sin\beta + 0,6\sqrt{L})^2 \quad \text{kN/m}^2$$

or

$$\left(0,28\lambda\, C_H\,(0,22 + 0,15\tan\alpha)\,(0,4V\sin\beta + 0,6\sqrt{L})^2 \quad \text{tonne-f/m}^2\right)$$

whichever is the greater.

(b) For inner doors:

$$p_e = 0,45L \quad \text{kN/m}^2$$
$$(0,046L \quad \text{tonne-f/m}^2)$$

or

$$p_e = 10q \quad \text{kN/m}^2$$
$$(1,02q \quad \text{tonne-f/m}^2)$$

whichever is the greater

The symbols are as defined in 8.1.1

8.6.2 The inner door internal design pressure, considered for the scantlings of securing devices, is not to be less than 25 kN/m^2 (2,5 tonne-f/m^2).

8.6.3 For visor doors, the pivot arrangement is to be such that the visor is self closing under external loads. The closing moment, M_c, is to be taken as:

$$M_c = P_x a + 10Wc - P_z b \quad \text{kN m}$$
$$(P_x a + 1{,}02Wc - P_z b \quad \text{tonne-f m})$$

but is not to be less than:

$$M_c = 10Wc + 0{,}1\sqrt{(a^2 + b^2)(P_x^2 + P_z^2)} \quad \text{kN m}$$
$$\left(1{,}02Wc + 0{,}1\sqrt{(a^2 + b^2)(P_x^2 + P_z^2)} \quad \text{tonne-f m}\right)$$

8.6.4 For visor doors, two securing devices are to be provided at the lower part of the door, each capable of providing the full reaction force required to prevent opening of the door within the permissible stresses given in 8.6.7. The opening moment M_o, to be balanced by this reaction force, is to be taken as not less than:

$$M_o = 10Wd + 5A_x a \quad \text{kN m}$$
$$\left(1{,}02Wd + 0{,}51A_x a \quad \text{tonne-f m}\right)$$

8.6.5 For visor type doors, the securing and supporting devices, excluding hinges, are to be capable of resisting the vertical design force (P_z – 10W) kN ((P_z – 1,02W) tonne-f), within the permissible stresses given in 8.6.7.

8.6.6 For side-opening doors, securing devices are to be provided such that in the event of a failure of any single securing device the remainder are capable of providing the full reaction force required to prevent the opening of the door. The permissible stresses given in 8.6.7 are not to be exceeded. The opening moment about the hinges to be balanced by this reaction force is not to be less than that calculated when the following loads are applied:

(a) An internal pressure of 5 kN/m^2 (0,51 tonne-f/m^2).
(b) A force of 10*W* kN (1,02*W* tonne-f) acting forward at the centroid of mass.

8.6.7 Securing devices and supporting devices are to be designed to withstand the forces given above using the following permissible stresses:

$$\tau = \frac{80}{k} \text{ N/mm}^2 \quad \left(\frac{8{,}2}{k} \text{ kgf/mm}^2\right)$$

$$\sigma_e = \frac{120}{k} \text{ N/mm}^2 \quad \left(\frac{12{,}2}{k} \text{ kgf/mm}^2\right)$$

$$\sigma_e = \frac{150}{k} \text{ N/mm}^2 \quad \left(\frac{15{,}3}{k} \text{ kgf/mm}^2\right)$$

8.6.8 The arrangement of securing and supporting devices is to be such that threaded bolts are not to carry support forces. The maximum tensile stress in way of threads of bolts, not carrying support forces, is not to exceed:

$$\frac{125}{k} \text{ N/mm}^2 \quad \left(\frac{12{,}7}{k} \text{ kgf/mm}^2\right).$$

8.6.9 For steel to steel bearings in securing and supporting devices, the nominal bearing pressure is not to exceed $0{,}8\sigma_y$. For other bearing materials, the permissible bearing pressure is to be determined according to the manufacturer's specification. The nominal bearing pressure is to be calculated by dividing the design force by the projected bearing area.

8.6.10 The reaction forces to be applied to the effective securing and supporting devices, are to be determined from the combination of external loads defined in Table 2.8.1.

Table 2.8.1 Combination of external loads

Bow door type	Combination of external loads	
	Case 1 (Head seas)	Case 2 (Quartering seas)
Visor doors, *see* Notes 1 and 2	P_x and P_z, *see* Note 3	$0{,}7P_y$ acting on each side separately, together with $0{,}7P_x$ and $0{,}7P_z$
Side opening, *see* Notes 1 and 2	P_x, P_y and P_z acting on both doors, *see* Note 3	$0{,}7P_x$ and $0{,}7P_z$ acting on both doors and $0{,}7P_y$ acting on each door separately

NOTES
1. P_x, P_y and P_z are defined in 8.5.15. These forces are to be applied at the centroid of the projected areas.
2. The self weight of the door is to be included in the combination of external loads.
3. The Case 1 forces are generally to give rise to a zero moment about the transverse axis through the centroid of area A_v, *see* Fig. 2.8.1.

8.6.11 The distribution of the reaction forces acting on the securing and supporting devices is to be supported by direct calculations taking into account the flexibility of the hull structure and the actual position and stiffness of the supports. Small and/or flexible devices, such as cleats, intended to provide load compression of the packing material are not to be included in these calculations.

8.6.12 The hinge or linking arms of a bow door and its supports are to be designed for the static and dynamic opening forces. A minimum wind pressure of 1,5 kN/m^2 (0,153 tonne-f/m^2), acting on the transverse projected area of the door is to be taken into account.

8.6.13 For side-opening doors, supporting devices are to be provided in way of girder ends at the closing of the two doors to prevent one side shifting towards the other under the effect of asymmetrical pressure. A typical arrangement is shown in Fig. 2.8.3.

8.6.14 Inner doors are to be gasketed and weathertight.

8.6.15 Only the active supporting and securing devices having an effective stiffness in the relevant direction are to be included and considered to calculate the reaction forces acting on the devices.

8.6.16 The number of securing and supporting devices is to be the minimum practicable whilst complying with 8.6.4 and 8.6.17 and taking account of the available space for adequate support in the hull structure.

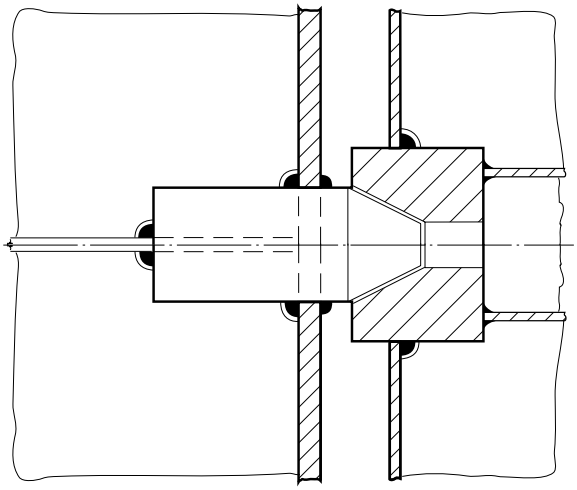

Fig. 2.8.3
Typical supporting device between doors

8.6.17 The arrangement of securing devices and supporting devices in way of these securing devices is to be designed with redundancy so that in the event of failure of any single securing or supporting device the remaining devices are capable of withstanding the reaction forces, resulting from the external loads defined in Table 2.8.1, without exceeding, by more than 20 per cent, the permissible stresses as defined in 8.6.7.

8.7 Operating and Maintenance Manual

8.7.1 An Operating and Maintenance Manual for the bow doors and inner doors is to be provided on board and is to contain the following information:

(a) main particulars and design drawings,
- special safety precautions;
- details of vessel, class and statutory certificates;
- equipment and design loading for ramps;
- key plan of equipment for doors and ramps;
- manufacturers' recommended testing for equipment; and
- a description of the following equipment:
  - bow doors;
  - inner bow doors;
  - bow ramp/doors;
  - side doors;
  - stern doors;
  - central power pack;
  - bridge panel;
  - ramps leading down from the main deck
  - engine control room panel.

(b) service conditions:
- limiting heel and trim of the ship for loading/unloading;
- limiting heel and trim for door operations;
- operating instructions for doors and ramps; and
- emergency operating instructions for doors and ramps.

(c) maintenance:
- schedule and extent of maintenance;
- trouble shooting and acceptable clearances; and
- manufacturers' maintenance procedures.

(d) register of inspections, including inspection of locking, securing and supporting devices, repairs and renewals.

This Manual is to be submitted for approval, and is to contain a note recommending that recorded inspections of the door supporting and securing devices be carried out by the ship's staff at monthly intervals or following incidents that could result in damage, including heavy weather or contact in the region of the doors. Any damages recorded during such inspections are to be reported to LR.

8.7.2 Documented operating procedures for closing and securing the bow doors and inner doors are to be kept on board and posted at an appropriate place.

■ *Section 9* Subdivision structure on vehicle deck

9.1 General

9.1.1 The requirements of this Section cover subdivision structure fitted on the vehicle deck(s) of roll on–roll off passenger ships. Subdivision structure includes partition doors, bulkheads and longitudinal casings.

9.1.2 Where a ship is provided with subdivision structure that complies with the requirements of this Section, the ship will be eligible to be assigned the descriptive note **SSDS** which will be entered in column 6 of the *Register Book*.

9.1.3 The fitting of subdivision structure on the vehicle deck(s) forms one option to mitigate the stability-reducing effects of water on the vehicle deck(s) after damage. Such measures may be required by the National Administration with whom the ship is registered and/or by the National Administration within whose territorial jurisdiction the ship is intended to operate, for example *see* The Stockholm Agreement.

9.2 Design loads

9.2.1 For calculation of the design loads, an equivalent depth of water on the first vehicle deck above the design waterline, *d*, in metres, is to be derived in accordance with the requirements of the National Administration, *see* 9.1.3.

9.2.2 It is assumed that vehicles and cargo are effectively lashed and secured to prevent movement from the stowed position.

9.2.3 The design heads (*see* Fig. 2.9.1) are not to be taken less than the greater of 0,5 m and:

(a) For transverse structure more than 1,5 m away from the longitudinal boundaries of the compartment:

$$h_T = 1{,}4\sqrt{L_c\, d\, K} \quad \text{in metres, for } z < 1$$

$$= 1{,}4\sqrt{L_c\, d\, K}\left(1 - \frac{(z-1)}{1{,}4\sqrt{L_c\, d\, K} - 1}\right)$$

in metres, for $z \geq 1$

Symbols are as defined in 9.2.4.

(b) For longitudinal structure more than $L_c/6$ away from the transverse boundaries of the compartment:

$$h_L = \sqrt{B_c\, d} \quad \text{in metres, for } z < 1$$

$$= \sqrt{B_c\, d}\left(1 - \frac{z-1}{\left(1{,}4\sqrt{B_c\, d} - 1\right)}\right) \text{ in metres, for } z \geq 1$$

Symbols are as defined in 9.2.4.

(c) For structure elsewhere:

$$h_c = \frac{L_c K}{2} + \sqrt{R} \quad \text{in metres, for } z < 1$$

$$= \left(\frac{L_c K}{2} + \sqrt{R}\right)\left(1 - \frac{(z-1)}{1{,}4\left(\frac{L_c K}{2} + R\right) - 1}\right)$$

in metres, for $z \geq 1$

Symbols are as defined in 9.2.4.

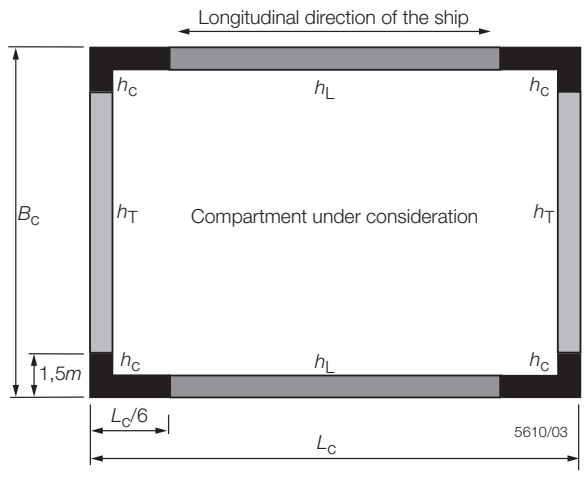

Fig. 2.9.1
Design heads for different locations in compartment

9.2.4 Symbols, as used in 9.2.3, are defined as follows:

d = equivalent depth of water on the vehicle deck, in metres, in the upright condition taking into account the volume of flooded and accumulated water on the vehicle deck calculated in accordance with the requirements of the National Administration, *see* 9.1.3 and 9.2.1

z = vertical distance, between the point under consideration and the flooded vehicle deck, in metres. For plate panels the point under consideration is to be taken as one third of the panel height above its lower edge. For stiffeners the point under consideration is to be taken as the midspan of the effective length

B_c = breadth of compartment, in metres, *see* Fig. 2.9.1

K = $0{,}21e^{(-0{,}0033L_{pp})}$ and need not exceed 0,14

L_c = length of compartment, in metres, *see* Fig. 2.9.1

R = $B_c\, d - \dfrac{L_c^2 K^2}{12}$ and is not to be taken less than 0

e = base of natural logarithms, 2,7183

L_{pp} = as defined in Pt 3, Ch 1,6.

9.2.5 The design heads calculated in 9.2.3 are based on the ship being in the upright condition. Where the actual damaged floating position is specified, the design heads will be specially considered taking this into account.

9.2.6 The subdivision structure, and access doors within the subdivision structure, are to be capable of withstanding the design loading applied from the side of the compartment under consideration.

9.2.7 Consideration will be given to the use of design heads agreed by the National Administration.

9.3 Height of subdivision structure

9.3.1 The height of the subdivision structure, H_D, is not to be less than:

- 4 m, or
- 8*d*, but not less than 2,2 m, or
- the height between the vehicle deck under consideration and the underside of the next watertight deck above,

whichever is the lesser

where

d = as defined in 9.2.4.

9.3.2 For special arrangements, such as hanging car decks or wide side casings, other subdivision structure heights may be accepted on the basis of detailed model tests in the flooded conditions under investigation by the National Administration.

9.4 Material

9.4.1 Where materials other than steel are used, the scantlings are to be specially considered.

9.5 Scantlings of subdivision structure other than doors

9.5.1 The minimum scantlings of subdivision bulkheads and casings are to be derived in accordance with Table 1.9.1 in Chapter 1 for watertight bulkheads, where h_4 is to be substituted by either of h_T, h_L or h_c, depending on the location under consideration.

9.5.2 Where a cut-out is made in the subdivision structure for the fitting of an access door, the strength and integrity of the subdivision structure are to be maintained.

9.6 Scantlings of subdivision doors

9.6.1 The plate thickness of subdivision doors of single plate construction is not to be less than the greater of:

t = $0{,}004 s f (h k)^{0{,}5}$ mm, or

t = 5,0 mm

where

s, k = as defined in 1.5.1

f = as defined in Table 1.9.1 in Chapter 1

h = h_T, h_L or h_c as defined in 9.2.3, as appropriate.

9.6.2 For subdivision doors of a double plate construction the plate thickness is to be specially considered.

9.6.3 The scantlings of primary and secondary stiffeners of subdivision doors are to be based on direct strength calculations.

9.6.4 The direct strength calculations are also to provide an assessment of the door, under the design load, to enable the leakage and hence the drainage requirements of 9.9 to be assessed.

9.6.5 For the purpose of the direct strength calculations, the stresses induced in the subdivision door, determined using the design loads from 9.2, are not to exceed the permissible values given in Table 2.9.1. Checks are also to be carried out to ensure that the door will not buckle under the design loads.

Table 2.9.1 Permissible stress values

Stress type	Permissible stress
Direct stress	σ_o
Shear stress	$\frac{\sigma_o}{3}$
Combined stress	σ_o
Symbols	
σ_o = specified minimum yield stress, in N/mm^2 (kgf/mm^2)	

9.6.6 Where a cut-out is made within the subdivision door for the fitting of an access door, the strength of the subdivision door is to be maintained.

9.7 Closing, securing and supporting of subdivision doors

9.7.1 The closing and securing devices of doors are to comply with the following requirements:

(a) Securing devices are to be simple to operate and easily accessible. They are to be of a design approved by LR for the intended purpose.

(b) Securing devices and supporting devices are to be designed to withstand the design loads calculated in 9.2.1 in association with the permissible stresses shown in Table 2.9.2.

(c) The arrangement of securing and supporting devices is to be such that threaded bolts do not carry support forces. The maximum tensile stress in way of threads of bolts not carrying support forces is not to exceed $0{,}5\sigma_o$.

(d) For steel to steel bearings in securing and supporting devices, the bearing pressure is not to exceed $0{,}8\sigma_o$. For other bearing materials, the permissible bearing pressure is to be determined according to the manufacturer's specification. The bearing pressure is to be calculated by dividing the design force by the projected bearing area.

(e) Only the active supporting and securing devices having an effective stiffness in the relevant direction are to be included when calculating the reaction forces acting on the devices.

(f) Securing devices are to be equipped with positive locking arrangements. Arrangements are to be such that the securing devices are retained in the closed position within design limits of inclination, vibration and other motion-induced loads and in the event of loss of any actuating power supply.

(g) Hydraulic systems are to comply with Pt 5, Ch 14,9.

(h) Control and monitoring arrangements are to comply with Pt 6, Ch 2,18.

Table 2.9.2 Permissible stress values

Stress type	Permissible stress
Direct stress	$0{,}8\sigma_o$
Shear stress	$0{,}5\sigma_o$
Combined stress	$0{,}8\sigma_o$
Symbols	
σ_o = specified minimum yield stress, in N/mm^2 (kgf/mm^2)	

9.7.2 The reaction forces to be applied to the effective securing and supporting devices are to be determined using the applicable design loads calculated using the heads in 9.2 together with the weight of the door.

9.8 Access doors

9.8.1 Access doors are permitted to be fitted in subdivision doors or bulkheads in order to provide access between compartments.

9.8.2 Access doors may be manually operated.

9.8.3 The strength of access doors is to be not less than that of the surrounding structure.

9.8.4 Means are to be provided to ensure that access doors are closed and secured when not in use after the ship has left the berth.

9.8.5 A notice is to be displayed on the access doors stating that the door is to be closed and secured at all times when not in use, when the ship is under way.

9.8.6 Means are to be provided on the navigation bridge to indicate whether the access doors are open or closed.

9.9 Watertightness and drainage

9.9.1 Subdivision doors and access doors are to be fitted with gaskets in order to minimize leakage. For access doors where down flooding could result, particular attention is to be paid to drainage requirements.

9.9.2 The gasket arrangement shall provide sufficient flexibility to absorb possible racking deformation.

9.9.3 Attention is drawn to the drainage requirements of Pt 5, Ch 13,3.1 with respect to the compartments created by subdivision structures.

9.9.4 The drainage arrangement for each compartment is to have sufficient capacity to handle leakage from any adjacent flooded compartment.

9.10 Ventilation of vehicle deck spaces

9.10.1 Attention is drawn to the ventilation requirement of Pt 6, Ch 2,13.12.4, since subdivision structure could disrupt air flow.

9.11 Operating and Maintenance Manual

9.11.1 An Operating and Maintenance Manual for the subdivision doors is to be provided on board and is to contain the following:

- main particulars and design drawings,
- service conditions (e.g. service area restrictions),
- maintenance and function testing,
- register of inspections, repairs and renewals.

9.11.2 The Manual is to be submitted for approval. It is to contain a note recommending that recorded inspections of supporting and securing devices are to be carried out by the ship's staff at monthly intervals, or following incidents that could result in damage, including heavy weather or contact in the region of the subdivision doors. Any damages recorded during such inspections are to be reported to LR.

9.11.3 Documented operating procedures for closing and securing the subdivision doors are to be kept on board and posted in an appropriate place.

■ *Section 10* Masts and standing rigging

10.1 General

10.1.1 Masts are generally to be of tubular construction and may be either stayed or unstayed. Special consideration will be given to other forms of construction.

10.1.2 Masts are to be of sufficient strength to withstand the worst combination of loads from both the operational case with full sail, reduced sail configurations where applicable and survival conditions.

10.1.3 Masts are to be adequately supported using stays if necessary.

10.1.4 Drainage is to be provided to prevent the build up of seawater or condensation within the mast structure. Steel masts should, where possible, be coated internally with a suitable anti-corrosive preparation.

10.1.5 Openings in the masts for entry and exit of running-rigging or cables should be adequately compensated with suitable insert plates or doublers.

10.1.6 Masts are to be efficiently integrated into the hull and in principle, carried through to the keel. Alternative arrangements of supporting masts will require to be specially considered.

10.1.7 Where ship response data are not available the values for roll, pitch and heave given in Table 2.10.1 should be used.

Table 2.10.1 Ship motions

Motion	Maximum single amplitude	Period, in seconds
Roll	$\phi = \sin^{-1}\theta$ degrees but need not exceed 30° and is not to be taken less than 22°	$T_r = \dfrac{0{,}7B}{\sqrt{GM}}$
Pitch	$\psi = 12e^{-0{,}0033L_{pp}}$ degrees, but need not exceed 8°	$T_p = 0{,}5\sqrt{L_{pp}}$
Heave	$\dfrac{L_{pp}}{80}$ m	$T_h = 0{,}5\sqrt{L_{pp}}$

where
L_{pp}, B as defined in Pt 3, Ch 1,6
GM = transverse metacentric height of loaded ship, in metres
$\theta = \left(0{,}45 + 0{,}1\,\dfrac{L}{B}\right)\left(0{,}54 - \dfrac{L}{1270}\right)$

10.2 Design loadings and allowable stresses

10.2.1 The mast and standing rigging design is to be considered with respect to the loads from the following conditions:

R1 – Operational case with full press of sails for the maximum operational apparent wind speed as specified by the designer.

R2 – Storm conditions with reduced sail.

R3 – Survival case with sails reefed/stowed/weather-vaning with the environmental loads resulting from the combination of a maximum wind speed of 63 m/sec and the accelerations produced by ship motions.

10.2.2 The mast section is to be designed to have a margin against failure due to column buckling using the greatest combined design axial and bending stress in both the transverse and fore and aft directions.

10.2.3 For loadcases R1 and R2 described in 10.2.1, the following condition is to be satisfied:

$$\frac{\sigma_b}{\sigma_y} + \frac{\sigma_a}{\sigma_c} \leq 0{,}67$$

For loadcase R3 the following condition is to be satisfied:

$$\frac{\sigma_b}{\sigma_y} + \frac{\sigma_a}{\sigma_c} \leq 0{,}85$$

where

σ_b is the bending stress in the mast section under consideration

σ_y is the tensile yield stress for the material

σ_a is the axial stress in the mast section under consideration

σ_c is the critical buckling stress for the mast section.

10.2.4 For thin walled masts, constructed from either flat or curved shells, calculations are to be submitted demonstrating adequate margin against local elastic instability.

10.3 Materials of mast construction

10.3.1 In general masts are to be constructed from either steel or aluminium alloy tubular members, extrusions and/or welded constructions, and are, generally, to comply with LR's *Rules for the Manufacture, Testing and Certification of Materials*, where appropriate.

10.3.2 Other materials will be specially considered.

10.4 Standing rigging

10.4.1 Standing rigging is to be so arranged such that it does not foul running rigging or interfere with the operation of the sails. Protection is to be provided against routine quay contacts.

10.4.2 Standing rigging is to be effectively attached to the masts, deck and hull structure and is to be so designed that it cannot become disconnected during operation.

10.4.3 Standing rigging is to be properly erected using tensioning devices to ensure that the correct pre-tension is applied as specified by the designer.

10.4.4 The initial pre-tension applied to standing rigging is to be measured and recorded.

10.5 Design loadings

10.5.1 The forces in the standing rigging are to be obtained by direct calculation methods for the load conditions given in 10.2.1.

10.5.2 The minimum factors of safety on the breaking strength of shrouds and stays are as follows:

Sail cases R1 and R2	3,5
Survival case R3	2,0

10.6 Shroud and stay attachment points

10.6.1 Standing rigging is to be effectively attached to the masts, ship's deck or bulwark structure. Chain plates, mast eyeplates and the structure in way is to be reinforced to withstand a load of 1,2 x breaking strength of the appropriate shroud or stay.

Generally the hull structure in way of shroud/stay attachment should be capable of withstanding the wire breaking load without permanent deformation of the structure.

10.6.2 Increased mast wall thickness, or, internal or external mast stiffening rings or diaphragms are to be arranged in way of the toes of shroud and stay eyeplates to resist mast wall punching shear loads. Where additional mast stiffening rings or diaphragms are not fitted, the mast wall is not to be less than:

$$t_{wall} = \frac{2\,(h_{eye}\,B_s\,k_{mast})}{(t_{eye}\,l_{eye})} \quad \text{(mm)}$$

where

h_{eye} = eyeplate pin axis from mast wall, mm, *see* Fig. 2.10.1

B_s = breaking strength, in kN, of attached rigging component

k_{mast} = mast material factor, *k*

t_{eye} = eyeplate thickness, mm, *see* Fig. 2.10.1

l_{eye} = eyeplate length, mm, *see* Fig. 2.10.1.

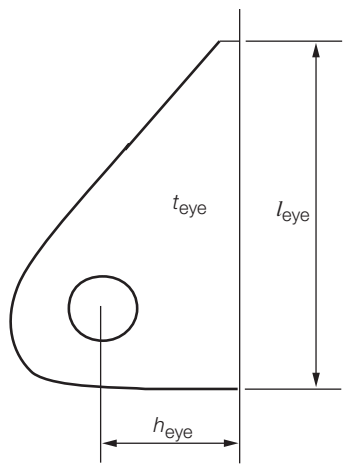

Fig. 2.10.1 Definition of h_{eye} and l_{eye}

10.6.3 The attachments of the stays and shrouds are to be efficiently integrated into the hull structure and due regard given to any attachments to the sheerstrake.

10.6.4 Where it is intended to use mechanical attachments (bolting) of running rigging or other gear to the mast walls, the number of holes are to be kept to a minimum and are to be staggered in order to maintain the structural integrity of the mast. All details are to be submitted.

10.7 Materials for rigging

10.7.1 In general, standing rigging is to be made from galvanised steel wire rope (GSWR) with galvanised steel rigging screws, shackles and terminations, and is to comply with the requirements of LR. Special consideration will however be given to other rigging materials.

10.7.2 Alternatively, stainless steel wire rope or solid rod rigging may be used in place of GSWR.

10.7.3 The steel wire rope, solid rods and loose fittings used for standing rigging are to be manufactured to a recognized National or International standard and at an LR approved works.

10.7.4 Rigging components from other sources will be specially considered.

10.7.5 Where stainless steel rigging is employed, particular attention is to be given to the selection of the grade of material used as some stainless steels are prone to stress corrosion cracking and consequent fatigue failure, the onset of which is not readily observed.

10.7.6 Attention is drawn to the requirements of the Flag Administration for the vessel who may have requirements regarding the application of certain materials, systems or criteria.

10.8 Testing and certification

10.8.1 All equipment items used for standing rigging, including loose items of gear such as shackles, bottle screws, sheaves, etc., are to be tested and surveyed in accordance with LR requirements. For systems employing specialised devices or materials, individual consideration will be given to the testing and survey requirements.

10.8.2 For sailing passenger ships, the equipment requirement will be in accordance with the letter and numeral two grades higher than that corresponding to the calculated Equipment Numeral.

■ *Section 11*
Miscellaneous openings

11.1 General

11.1.1 The requirements of Pt 3, Ch 11,6 are to be complied with.

11.2 Openings in main vehicle deck

11.2.1 Where the main vehicle deck is enclosed, all companionways and openings in the deck which lead to spaces below are generally to be protected by steel doors or hatch covers. Approved fire doors may be accepted in lieu of steel doors. The sills or coamings are to be not less than 230 mm above the main vehicle deck, with the exception of those leading to machinery spaces which are to have sills or coamings not less than 380 mm. Exceptionally, when such openings are to be kept closed at sea, sills or coamings may be reduced in height, provided that the sealing arrangements are adequate. In such cases, the doors or hatch covers are to be secured weathertight by gaskets and a sufficient number of clamping devices. Such items as portable plates in the main vehicle deck arranged for the removal of machinery parts, etc., may be arranged flush with the deck, provided they are secured by gaskets and closely spaced bolts at a pitch not exceeding five diameters.

11.2.2 Scuppers from vehicle or cargo spaces fitted with an approved fixed pressure water spray fire-extinguishing system are to be led inboard to tanks. Alternatively they may be led overboard providing they comply with Pt 3, Ch 12,4.1.3 (a) and (b).

11.2.3 Inboard draining scuppers do not require valves but are to be led to suitable drain tanks (not engine room or hold bilges) and the capacity of the tanks should be sufficient to hold approximately 10 minutes of drenching water. The arrangements for emptying these tanks are to be approved and suitable high level alarms provided.

11.2.4 A drainage system is to be arranged in the area between bow door and ramp, or where no ramp is fitted, between the bow door and inner door. The system is to be equipped with an audible and visual alarm function to the navigation bridge being set off when the water levels in these areas exceed 0,5 m or the high water level alarm, whichever is the lesser.

11.2.5 The drainage arrangement for each area is to have sufficient capacity to prevent accumulation of water in case of leakage. Scuppers are to be provided on both sides of the ship with a diameter not less than 50 mm and in accordance with Pt 3, Ch 12,4. Alternatively, a bilge suction should be provided.

11.2.6 If the main vehicle deck is not totally enclosed, scuppers or freeing ports are to be provided consistent with the requirements of Pt 3, Ch 8,5.3.

11.2.7 Air pipes from cofferdams or void spaces may terminate in the enclosed 'tween deck space on the main vehicle deck provided the space is adequately ventilated and the air pipes are provided with weathertight closing appliances.

11.2.8 Between the bow door and the inner door a television surveillance system is to be fitted with a monitor on the navigation bridge and in the engine control room. The system must monitor the position of doors and a sufficient number of their securing devices. Special consideration is to be given for lighting and contrasting colour of objects under surveillance, *see also* 8.5.7.

11.3 Strength assessment of windows in large passenger ships

11.3.1 On windows in the second tier and higher above the freeboard deck, a glazing equivalent may be fitted in lieu of deadlights/storm covers. The thicknesses and arrangements are to be acceptable to the National Authority with whom the ship is registered and/or by the Administration within whose territorial jurisdiction the ship is intended to operate. For arrangements of glazing acceptable to LR, *see* Table 2.11.1. Alternative arrangement of glazing in lieu of deadlights/storm covers may be accepted provided details are submitted for consideration.

11.3.2 For passenger ships the design pressure, H_d, on windows is to be taken as given in Table 2.11.2, or an equivalent National or Internationally recognized standard.

11.3.3 The thickness, t_o, of toughened safety glass is to be taken as given in Table 2.11.3.

Table 2.11.2 Design pressure, H_d, on windows

Window location	Design pressure H_d in t/m^2
Between the design waterline and a point $Z_{1,5}$ m above the waterline	Per BS MA 25: 1973
Between a point $Z_{1,5}$ m above the waterline and the deck immediately above (at $Z_{d1,5}$)	1,5
Over the next 2 'tween deck heights	$1,5 - f_w \left(\frac{Z_w - Z_{d1,5}}{H_{t1} + H_{t2}} \right)$
For subsequent decks to the top of the navigation bridge	0,25 sides and aft ends 0,75 house fronts
From the top of the navigation bridge to the uppermost deck, for house fronts	0,75 at top of navigation bridge 0 at uppermost continuous deck, with linear variation between, but not less than 0,25
From the top of the navigation bridge to the uppermost deck, at sides and aft ends	0,25

Symbols

f_w = 1,25 in way of sides and ends of superstructures
= 0,75 in way of house fronts

$Z_{1,5}$ = the vertical location in metres above the waterline at which the BS MA:25 pressure as given in Annex E of BS MA:25 (1973) is 1,5 t/m^2

$Z_{d1,5}$ = the vertical location in metres of the deck at which the pressure is 1,5 t/m^2 from the table above

Z_w = the vertical location in metres above the waterline to the point under consideration

$H_{t1} + H_{t2}$ = sum of the appropriate 'tween deck heights in metres

Table 2.11.1 Acceptable arrangements of glazing in lieu of portable storm covers/deadlights

In lieu of portable storm covers	In lieu of deadlights and storm covers
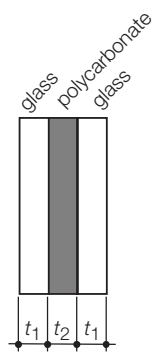 $t_1^2 + (0,77t_2)^2 + t_1^2 = (1,2t_0)^2$	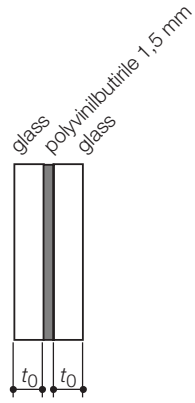 $t_0^2 + t_0^2 = (1,4t_0)^2$ 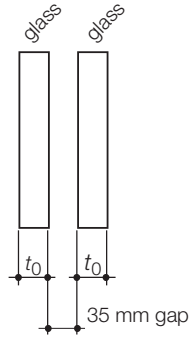

Symbols

t_0 = minimum thickness of toughened glass as calculated in Table 2.11.3.

Table 2.11.3 Thickness of toughened glass

Window type	Thickness, t_o, in mm
Rectangular	$b\sqrt{\dfrac{H_d\,\beta}{4000}}$
Circular	$0{,}0175\,r\sqrt{H_d}$
Semi-circular	$0{,}011r\sqrt{H_d}$
Symbols	
b = length of shorter side of window, in mm H_d = design pressure head, in metres, as calculated in Table 2.11.2 β = $0{,}54A_R - 0{,}078A_R^2 - 0{,}17$ for $A_R \le 3$ = 0,75 for $A_R > 3$ A_R = aspect ratio of window, in mm = a/b a = length of longer side of window, in mm r = the radius of the window, in mm	

11.4 Frame design and testing

11.4.1 **Application**. The testing requirements contained in this Section are for all exterior window designs for passenger ships regardless of length. The testing is to be carried out for characteristic window sizes (largest, smallest) and forms (circular, semi-circular and rectangular) for each passenger ship. Window designs, which are not covered by Type Approval Certification, will require prototype testing in order to confirm structural integrity and water tightness. Tests are to be carried out to the satisfaction of the Surveyor.

11.4.2 **Water tightness**. A hydrostatic test is to be carried out in order to examine water tightness. This is carried out by applying the design pressure head H_d, as calculated in Section 11.3, and maintained at this level for at least 15 minutes.

11.4.3 **Structural testing**. A hydrostatic test is to be carried out in order to examine the capability of the frame, mullions and glass retaining arrangements. This is carried out by applying a test pressure of $4H_d$ (H_d as calculated in Section 11.3). Alternatively this test may be carried out using a steel plate in place of the glass. Ideally, the steel plate thickness should be of a suitable reduced thickness in order to simulate the flexural performance of the glass.

11.4.4 Equivalent proposals for testing will be considered. Where alternative testing procedures are proposed, these are to be agreed with LR before commencement.

11.4.5 **Chemically toughened glass.**

(a) Chemically toughened glass may be used in lieu of thermally toughened glass provided it can be demonstrated the strength of the arrangement is at least equivalent in strength to that of thermally toughened glass.

(b) The glazing system is to be of laminated construction.

(c) Method of testing will be specially considered.

11.4.6 The overlap between glazing and the retaining frame is not to be less than 12 mm.

■ *Section 12* Glass structures

12.1 General

12.1.1 The requirements of 12.3 and 12.4 apply solely to external balcony balustrades.

12.2 Strength of mullions

12.2.1 The section modulus of mullions is not to be less than:

$$Z = 10{,}78 H_d\, l\, A_m\, k\, 10^{-9}\ \text{cm}^3$$

where

a = *see* Table 2.12.1

b = *see* Table 2.12.1

r = *see* Table 2.12.1

l = a for rectangular windows

= $2r$ for semi-circular windows

H_d = design pressure head, in metres, as calculated in 11.3.2

A_m = ab for rectangular windows

= $1{,}22r^2$ for semi-circular windows

k = as defined in 1.5.1

12.3 Top rail of balcony balustrades

12.3.1 The minimum section modulus of the steel top rail of glass wall balconies is given by:

$$Z = L_b^2\ \text{cm}^3$$

where

L_b = span of top rail, in metres.

12.4 Glass balustrades

12.4.1 The minimum thickness of glass balustrades is to be not less than as given by Table 2.11.3 using a design pressure of H_d = 0,25 t/m^2.

12.4.2 The glazing is to be of laminated construction.

Table 2.12.1 Mullion arrangements

Rectangular windows	Semi-circular windows
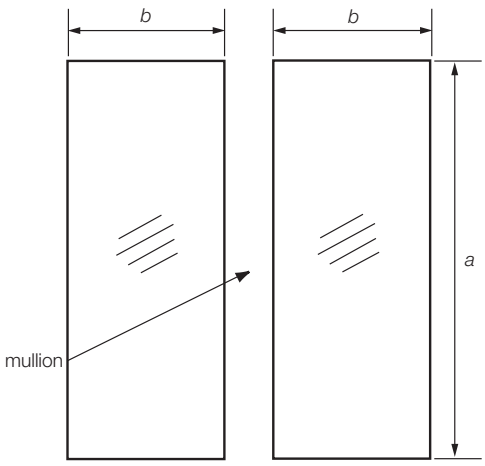	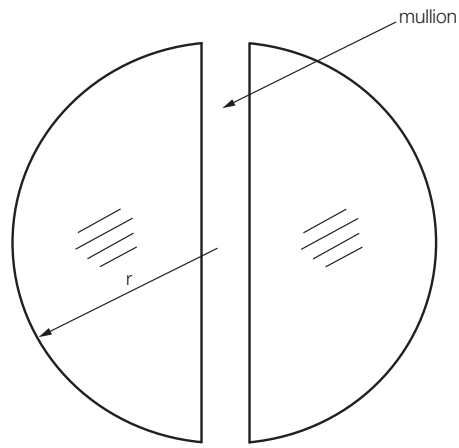
Symbols	
a = dimension parallel to mullion, in mm *b* = length of shorter side of window, in mm *r* = radius of the window, in mm	

■ *Section 13* Direct calculation

13.1 Application

13.1.1 Direct calculations are to be employed in derivation of scantlings where required by preceding Sections of this Chapter or by related provisions included in Part 3.

13.1.2 Direct calculation methods are also generally to be used where additional calculations are required by the Rules in respect of unusual structural arrangements.

13.2 Procedures

13.2.1 For details of LR's direct calculation procedures, *see* Pt 3, Ch 1,2. For requirements concerning use of other calculation procedures, *see* Pt 3, Ch 1,3.

Section

1 **General**

2 **Longitudinal strength**

3 **Floors in single bottoms**

4 **Panting and strengthening of bottom forward**

5 **Machinery casings**

6 **Freeing arrangements**

7 **Towing arrangements**

8 **Fenders**

9 **Escort operation, performance numeral and trials**

■ *Section 1* General

1.1 Application

1.1.1 Sections 1 to 8 of this Chapter apply to tugs, but are not applicable to offshore tugs/supply ships, which are dealt with in Chapter 4.

1.1.2 Section 9 of this Chapter applies to tugs and offshore supply ships intended to provide escort operation.

1.1.3 The scantlings and arrangements are to be as required by Chapter 1 except as otherwise specified. The draught, *T*, used for the determination of scantlings is to be not less than 0,85*D*.

1.2 Class notations

1.2.1 In general, tugs for unrestricted service complying with the requirements of Sections 1 to 8 will be eligible to be classed **100A1 tug**.

1.2.2 Tugs for unrestricted service complying with the requirements of this Chapter, except 9.3, will be eligible to be classed **100A1 escort tug**.

1.2.3 Tugs for unrestricted service complying with the requirements of this Chapter will be eligible to be classed **100A1 escort tug EPN (F,B,V,C).** The performance numeral **(F,B,V,C)** contains the performance ratings obtained from full scale trials in accordance with 9.3.

1.2.4 Tugs intended to be operated only in suitable areas or conditions which have been agreed by the Committee, as defined in Pt 1, Ch 2,2.3.6 to 2.3.10, will receive individual consideration on the basis of the Rules with respect to the environmental conditions agreed for the design basis and approval. In particular, tugs complying with the requirements of this Chapter and Pt 3, Ch 13,7 for the relevant reduced equipment requirements, will be eligible to be classed:

- **A1 tug protected waters service**; or
- **A1 escort tug protected waters service**; or
- **A1 escort tug EPN (F,B,V,C) protected waters service**, (*see* Pt 1, Ch 2,2.3.6); or
- **100A1 tug with service restriction notation**; or
- **100A1 escort tug with service restriction notation**; or
- **100A1 escort tug EPN (F,B,V,C) with service restriction notation**;

whichever is applicable.

1.2.5 The Regulations for classification and the assignment of class notations are given in Pt 1, Ch 2 to which reference should be made.

1.3 Information required

1.3.1 In addition to the information and plans required by Pt 3, Ch 1,5, plans covering the following items are to be submitted for approval where applicable:

- Support structure and foundations of towing equipment.
- Skegs, propeller guards and other structures which support the weight of the vessel during dry-docking.

1.3.2 The following supporting documents are to be submitted for information:

- Towing arrangements, including lines of action, magnitudes and corresponding points of application of towline pulls on towing equipment.
- Details of the breaking strength of the components of the towline system, together with maximum pull and brake holding load, or equivalent, of towing winches where applicable.

■ *Section 2* Longitudinal strength

2.1 General

2.1.1 The longitudinal strength standard is to comply with the relevant requirements of Pt 3, Ch 4.

2.1.2 The requirements of Pt 3, Ch 4,8.3 regarding loading instruments are not applicable to tugs.

Section 3
Floors in single bottoms

3.1 Floors

3.1.1 Single bottom floors are to be in accordance with the requirements of Ch 1,7, except that floors clear of the machinery space may be flanged in lieu of a face plate being fitted.

Section 4
Panting and strengthening of bottom forward

4.1 Panting region reinforcement

4.1.1 The arrangements to resist panting required by Pt 3, Ch 5 do not apply to tugs less than 46 m in length. In tugs 46 m or more in length, additional stiffening is also to be fitted in the 'tween decks throughout the panting region.

4.2 Strengthening of bottom forward

4.2.1 The requirements for strengthening of bottom forward detailed in Pt 3, Ch 5 do not apply to tugs.

Section 5
Machinery casings

5.1 Escape hatches

5.1.1 Any emergency exit from the machinery room to the deck is to be capable of being used at extreme angles of heel, and should be positioned as high as possible above the waterline and on or near the ship's centreline. Covers to escape hatches are to have hinges arranged athwartships. Coaming heights are to be at least 600 mm above the upper surface of the deck.

Section 6
Freeing arrangements

6.1 General

6.1.1 If the only means of access to the wheelhouse is external, then stormboards, or an equivalent, are to be fitted between the deckhouse and the ship's sides forward of any deckhouse doors up to the height of the bulwark rail. A gap is to be left between the deck and the bottom board for freeing purposes.

Section 7
Towing arrangements

7.1 Towing equipment

7.1.1 For tugs which normally tow over the stern with the main towline connection to the hull ahead of the propellers, the position of towline connection is normally to be five to 10 per cent of the ship's length abaft amidships, but in no circumstances is it to be sited forward of a position, five per cent of the ship's Rule length abaft the longitudinal centre of gravity of the tug in any anticipated condition of loading.

7.1.2 The attachment of the towline to the tug is to be located as low as practicable in order to minimize heeling moments arising from working conditions. Reliable slip arrangements which facilitate towline release regardless of the angle of the towline are to be provided.

7.1.3 It is recommended that the slip arrangements should also be operable from the bridge. The arrangements should be tested to the Surveyor's satisfaction. The breaking strength of the hook, or its equivalent, should generally be 50 per cent in excess of that of the towline, *see* Pt 3, Ch 13,7.

7.2 Towing equipment foundations

7.2.1 Direct support for towing equipment by means of pillars and/or pillar bulkheads is to be arranged as far as this is practicable.

7.2.2 The design load for the support structure in way of towing equipment is to be not less than the breaking strength of the towline system. The design load is also to be taken as not less than the breaking strength of the tow hook or the brake holding load, or equivalent, of the winch, whichever is appropriate.

7.2.3 Scantlings of pillars and pillar bulkheads are to be in accordance with Ch 1,4.4.

7.2.4 Scantlings of deck girders and transverses forming the support structure of towing equipment are to be determined by direct calculations using the following stresses:

$$\tau = \left(\frac{87}{k}\ \text{N/mm}^2\right)\left(\frac{8,9}{k}\ \text{kgf/mm}^2\right)$$

$$\sigma = \left(\frac{150}{k}\ \text{N/mm}^2\right)\left(\frac{15,3}{k}\ \text{kgf/mm}^2\right)$$

$$\sigma_e = \left(\frac{213}{k}\ \text{N/mm}^2\right)\left(\frac{21,7}{k}\ \text{kgf/mm}^2\right)$$

where

τ = shear stress, in N/mm^2

σ = bending stress, in N/mm^2

k = material factor, *see* Pt 3, Ch 2,1.2

σ_e = equivalent stress, in N/mm^2

$\sqrt{\sigma^2 + 3\tau^2}$

7.2.5 Generally, the foundations of towing fairleads are to be carried through the deck and integrated into suitable underdeck structure.

7.2.6 On tugs which utilise an indirect method of towing, attention is drawn to the increased out-of-plane forces that occur in towing fairleads.

■ *Section 8* Fenders

8.1 Ship's side fenders

8.1.1 An efficient fender is to be fitted to the ship's side at deck level extending all fore and aft.

■ *Section 9* Escort operation, performance numeral and trials

9.1 General

9.1.1 An escort tug is a tug intended for escort operation. Escort operation is an operation in which the tug closely follows the assisted ship providing control by steering and braking, as necessary.

9.1.2 Escort tugs are to be capable of utilizing methods of towing through which steering and braking forces are generated by a combination of propulsive and hydrodynamic forces developed by the tug, acting on the towline to the attended ship, *see* example in Fig. 3.9.1.

9.1.3 The intact stability of the tug during escort operation is to comply with a Standard recognized by the National Administration with whom the ship is registered and/or by the National Administration within whose territorial jurisdiction the tug is intended to operate, as applicable. Attention is drawn to the inherent problems relating to the quick release of the towline and the sudden loss of propulsion power during the escort operation in addition to the maximum steering and braking forces.

9.2 Towing arrangements

9.2.1 The specified breaking strength of the towline is to be at least 2,5 x maximum design towline force.

9.2.2 The towing winch is to include a system of continuous load monitoring, with a bridge readout display and an overload prevention system, which is to be operational during escort duties. The overload prevention system is to be designed with the capability to pay out the towline in a controlled manner when the load reaches the maximum design towline force, and is to be capable of alerting the Master and crew.

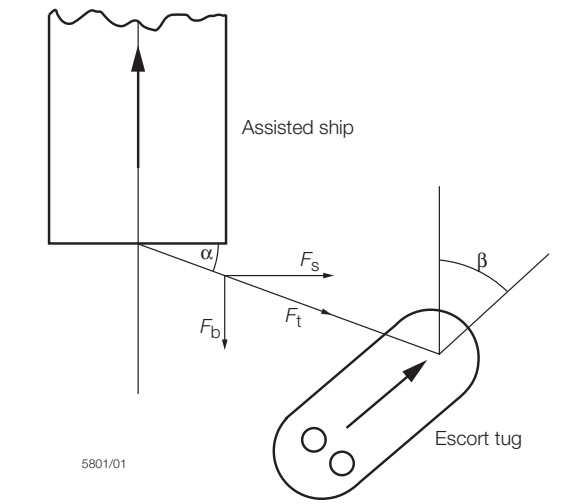

F_t = force exerted by the tug on the assisted ship via the towline
F_s = steering (athwartships) component of F_t
F_b = breaking (longitudinal) component of F_t
α = angle between assisted ship's transverse axis and towline
β = angle between centreline of assisted ship and centreline of tug

Fig. 3.9.1
Forces generated during a typical escort mode

9.3 Performance trials

9.3.1 Escort tugs which carry out full scale performance trials in accordance with the requirements of this Section will be eligible to have the escort performance numeral **EPN (F,B,V,C)** appended to the **escort tug** notations, *see* 1.2.3, 1.2.4 and Ch 4,1.2.2,
where

F is the maximum steering force (F_s), in tonnes, *see* Fig. 3.9.1 and 9.3.6.
B is the maximum braking force (F_b), in tonnes, *see* Fig. 3.9.1 and 9.3.6.
V is the speed, in knots, at which **F** and **B** are determined.
C is the time, in seconds (s), required for the escort tug in manoeuvring from maintained oblique position of tug giving maximum steering force F_s on one side of assisted vessel to mirror position on the other side, *see* 9.3.6. The towline angle, α, need not be taken less than 30°, *see* Fig. 3.9.1.

9.3.2 The performance numeral may be determined with speed **V** equal to either 8 knots or 10 knots. If both sets of numerals are determined at the trials then the class notation will include them all.

9.3.3 A trials plan, which includes the estimated forces, is to be submitted and approved prior to trials being undertaken.

9.3.4 The trials of the escort tug are to be performed using a ship capable of maintaining almost constant heading and speed when subjected to the steering and braking forces from the escort tug.

9.3.5 The following trials are to be carried out in calm weather conditions and in the presence of a Lloyd's Register (hereinafter referred to as 'LR') Surveyor:

- Steering and braking force capability test, *see* 9.3.6.
- Bollard pull test, *see* 9.3.8.

A record of the results is to be kept on board the escort tug.

9.3.6 Prior to commencing a trial, the following data are to be recorded:

- Wind speed and direction.
- Sea state.
- Current speed and direction.
- Water depth.
- The main particulars and the loading condition of the assisted ship.
- Loading condition of the escort tug.

9.3.7 **Steering and braking force capability test** is a test by which the steering force, F_s, and braking force, F_b, are determined when utilizing the method, shown in Fig. 3.9.1, of towing at a range of towline angles, α, from 0 to 90 degrees and for a range of operating speeds up to and including the maximum escort speed. The following parameters are to be continuously recorded during the test:

- Position, speed and heading of the assisted ship and the escort tug.
- Towline force, F_t.
- Angle of towline, α.
- Heel angle of the escort tug.
- Direction of thrust and power absorbed by all propellers and thrusters of the tug.
- Rudder angles of the tug.

9.3.8 The length of the towline is to represent a typical operating condition and is to be recorded prior to and at the completion of the test. The steering and braking forces for a given speed and angle can be calculated by using the average values of the recorded towline force.

9.3.9 **Bollard pull test** is to be carried out in accordance with LR's *Bollard Pull Certification Procedures Guidance Information*.

Section

1 **General**

2 **Longitudinal strength**

3 **Hull envelope plating**

4 **Hull envelope framing**

5 **Superstructures and deckhouses**

6 **Miscellaneous openings**

7 **Watertight bulkhead doors**

8 **Engine exhaust outlets**

9 **Transport and handling of limited amounts of hazardous and noxious liquid substances in bulk**

■ *Section 1* General

1.1 Application

1.1.1 This Chapter applies to sea-going ships specially designed and constructed for the carriage of specialized stores and cargoes to mobile offshore units and other offshore installations, and also to offshore tug/supply ships which in addition to the above perform the duties of a tug.

1.1.2 The scantlings and arrangements are to be as required by Chapter 1, except as otherwise specified in this Chapter.

1.1.3 Attention is drawn to the need for Masters to be able to assess the stability of their ships quickly and accurately in all service conditions, *see* Pt 1, Ch 2,3.

1.2 Class notations

1.2.1 In general, ships complying with the requirements of this Chapter will be eligible to be classed:

- **100A1 offshore supply ship**; or
- **100A1 offshore tug/supply ship**;

whichever is applicable.

1.2.2 Ships complying with the requirements of Ch 3,9 and the requirements of this Chapter will be eligible to be classed:

- **100A1 offshore escort tug/supply ship**; or
- **100A1 offshore escort tug EPN (F,B,V,C)/supply ship**;

whichever is applicable.

1.2.3 The Regulations for classification and the assignment of class notations are given in Pt 1, Ch 2, to which reference should be made.

1.3 Information required

1.3.1 In addition to the information and plans required by Pt 3, Ch 1,5, plans covering the following items are to be submitted where applicable:

- Separate or independent cargo tanks.
- Cargo tank foundations and securing arrangements.
- Towing arrangements, including supports and foundations of towing winches.
- Supports and foundations for anchor handling and laying arrangements for anchors carried as cargo.
- Arrangements for the stowage of deck cargoes (cargo containment) and details of any associated racks or other similar structures and their supports and foundations.
- Movable decks, including the stowing arrangements for portable components.
- Freeing arrangements.

1.4 Symbols

1.4.1 The symbols are as defined in Ch 1,1.5.

■ *Section 2* Longitudinal strength

2.1 General

2.1.1 The longitudinal strength standard is to comply with the relevant requirements of Pt 3, Ch 4.

2.1.2 The requirements of Pt 3, Ch 4,8.3 regarding loading instruments are not applicable to offshore supply ships.

■ *Section 3* Hull envelope plating

3.1 Side shell

3.1.1 The thickness of side shell is to be that required by Ch 1,5.4 but is in no case to be less than 9 mm.

3.1.2 Efficient fenders are to be fitted, with adequate support behind them, in exposed areas.

3.1.3 Shell in way of stern rollers immediately adjacent to high duty bollards and in other high load areas is to be suitably reinforced.

3.2 Weather decks

3.2.1 Where cargo is to be carried on weather decks, the scantlings are to be suitable for the specified loadings, but in no case is a head less than 3,5 m to be used. Additional local increases in scantlings may be required where specialized cargoes are likely to induce concentrated loads. The thickness, t, of deck plating is to be not less than:

$$t = (0{,}025L + 7) \quad \text{mm}$$

3.3 Cargo containment

3.3.1 Means are to be provided to enable deck cargoes to be adequately secured and protected. In general, suitable inner bulwarks, rails, bins or storage racks of substantial construction are to be provided and properly secured to adequately strengthened parts of the hull structure. Properly designed locking equipment or efficient means of lashing containers are to be fitted where appropriate. Small hatches (including escape hatches), valve controls, ventilators, air pipes, etc., are to be situated clear of the cargo containment areas.

■ *Section 4* Hull envelope framing

4.1 Transverse framing

4.1.1 The section moduli of the main and 'tween deck frames are to be 25 per cent greater than those required by Ch 1,6, Pt 3, Ch 5,4 and Pt 3, Ch 6,4. Frames are not to be scalloped.

■ *Section 5* Superstructures and deckhouses

5.1 Scantlings

5.1.1 The scantlings of deckhouses situated on the forecastle deck and above are to comply with the requirements of Table 4.5.1.

5.1.2 The scantlings of forecastle end bulkheads are to be not less than those required by Table 4.5.1 for aft ends of deckhouses or less than those required by Pt 3, Ch 8,2 for an exposed machinery casing.

Table 4.5.1 Superstructures and deckhouses on forecastle deck

Position	Thickness of plating, in mm	Modulus of stiffeners, in cm^3	Depth of stiffeners, in mm
Fronts	The greater of t = 0,012s or 8,0	$Z = 0{,}034sl_e^2$	Not less than 100
Sides	The greater of t = 0,01s or 6,5	$Z = 0{,}027sl_e^2$	Not less than 75
Aft ends	The greater of t = 0,008s or 6,5	$Z = 0{,}027sl_e^2$	Not less than 65
NOTE The ends of stiffeners are to be connected on all tiers.			

■ *Section 6* Miscellaneous openings

6.1 General

6.1.1 For offshore supply ships the requirements of Pt 3, Ch 11,6 are to be complied with.

6.2 Access from freeboard deck

6.2.1 There is to be no direct access from the freeboard deck to machinery or other spaces below the freeboard deck. Indirect access may be arranged via a space or passageway fitted with an outer door having a sill not less than 600 mm high and an inner door having a sill not less than 380 mm high. The inner door is to be self-closing and gastight. The space or passageway between the two doors is to be adequately drained. It is desirable, however, that access to spaces below the freeboard deck is arranged from a position above the superstructure deck. Where it is necessary to provide an emergency escape trunk which cannot terminate within a superstructure space, the arrangements for maintaining the integrity of the hatch or outlet are to be approved by Lloyd's Register (hereinafter referred to as 'LR').

6.3 Windows and side scuttles

6.3.1 The requirements of this Section are to be applied in conjunction with Pt 3, Ch 11,6.5.

6.3.2 Windows may only be fitted in the following locations:

(a) Second tier and higher above the freeboard deck:
  (i) in the after end bulkhead of deckhouses and superstructures,
  (ii) in the sides of deckhouses and superstructures which are not part of the shell plating.

(b) Third tier and higher above the freeboard deck:
  (i) in the forward facing bulkheads of deckhouse and superstructures, except that in the first tier of the front bulkhead above the weather deck, only side scuttles will be accepted.

6.3.3 In locations not specified in 6.3.2, only side scuttles will be accepted.

6.3.4 Permanently attached deadlights are to be provided as follows:

(a) Side scuttles:
  (i) in the side shell plating,
  (ii) in the forward facing bulkheads of superstructures and deckhouses,
  (iii) in the sides of deckhouses and superstructures up to and including the third tier above the freeboard deck,
  (iv) in the after end bulkheads of superstructures, deckhouses, casings and companionways in the first and second tiers above the freeboard deck.

(b) Windows in locations permitted in 6.3.2:
  (i) in the sides of deckhouses and superstructures in the second and third tiers above the freeboard deck.
  (ii) in the after end bulkheads of superstructures, deckhouses, casings and companionways in the second tier above the freeboard deck.

6.3.5 On windows in the second tier and higher above the freeboard deck, hinged storm covers may be fitted in lieu of deadlights, provided there is safe access for closing.

6.3.6 Windows in the wheelhouse front are to have deadlights or storm covers. For storm covers, an arrangement for easy and safe access is to be provided, (e.g. gangway with railing). However, for practical purposes, the deadlights or storm covers may be portable if stowed adjacent to the window for quick fitting. At least two of the deadlights or storm covers are to have the means of providing a clear view.

6.3.7 Deadlights for side scuttles, and for windows not mentioned in 6.3.5 and 6.3.6, are to be internally hinged.

6.3.8 Side scuttles are to comply with ISO Standard 1751, as follows:

(a) Type A side scuttles in the shell plating, in the sides of superstructures and in the forward facing bulkheads of superstructures and deckhouses on the weather deck;
(b) Type B side scuttles in the after ends of superstructures and in the sides and ends of deckhouses; or
(c) an equivalent National Standard.

6.3.9 The thickness of the toughened safety glass for windows is to be determined from Tables 4.6.1 and 4.6.2.

6.3.10 Windows of larger sizes than given in Tables 4.6.1 and 4.6.2 are not acceptable, except in the after ends of deckhouses which are to be submitted for consideration in each case.

6.3.11 For the location of windows and side scuttles, *see* Fig. 4.6.1.

Table 4.6.1 Thickness of toughened safety glass fitted in windows in front and side bulkheads

Nominal dimensions of window, mm x mm	Thickness of toughened safety glass, mm			
	2nd tier	3rd tier	4th tier	5th tier
300 x 425	12	12	10	10
355 x 500	15	15	12	10
400 x 560	19	15	12	10
450 x 630	19	19	15	12
500 x 710	–	19	15	12
560 x 800	–	–	19	15
900 x 630	–	–	–	15
1000 x 710	–	–	–	19

Table 4.6.2 Thickness of toughened safety glass fitted in windows in after end bulkheads

Nominal dimensions of window, mm x mm	Thickness of toughened safety glass, mm		
	2nd tier	3rd tier	4th tier and higher
300 x 425	10	10	10
355 x 500	10	10	10
400 x 560	12	12	10
450 x 630	15	12	10
500 x 710	15	15	10
560 x 800	–	15	10
900 x 630	–	19	12
1000 x 710	–	–	12

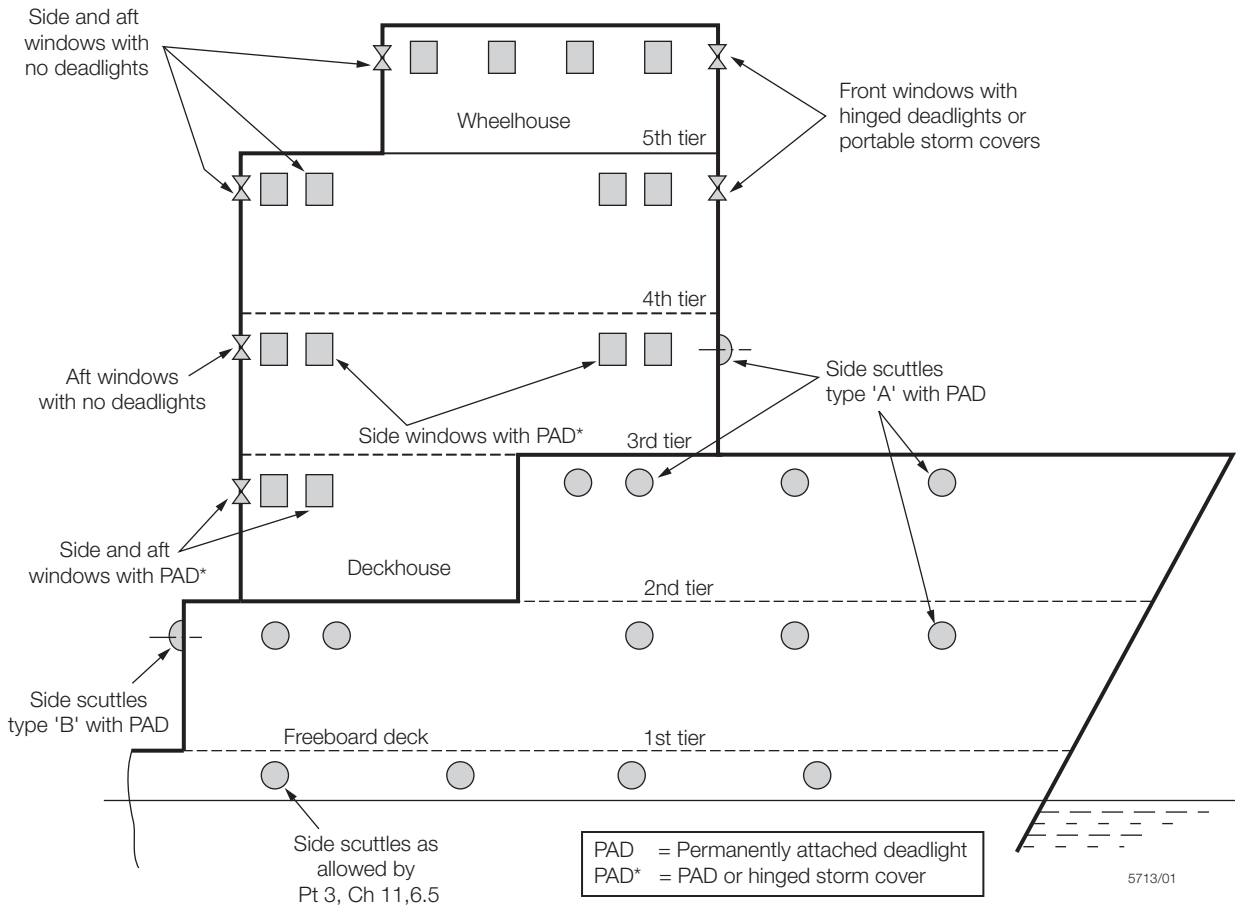

Fig. 4.6.1 Location of windows and side scuttles

■ *Section 7* Watertight bulkhead doors

7.1 Watertight doors

7.1.1 Watertight doors are to be efficiently constructed and fitted in accordance with Pt 3, Ch 11,9 and hose tested in place as required by Pt 3, Ch 1,8.

■ *Section 8* Engine exhaust outlets

8.1 Location

8.1.1 Engine exhaust outlets are to be located as high as is practicable above the deck and are to be fitted with spark arresters.

■ *Section 9* Transport and handling of limited amounts of hazardous and noxious liquid substances in bulk

9.1 General

9.1.1 Attention is drawn to IMO Resolution A.673 (16) *Guidelines for the Transport and Handling of Hazardous and Noxious Liquid Substances in Bulk in Offshore Support Vessels*, which includes reference to:

- Stability, cargo tank location and ship design, and
- IMO Resolution A.469 (12) *The Guidelines for the Design and Construction of Offshore Supply Vessels*.

9.1.2 It is possible that the National Authority will require compliance with these IMO Guidelines and future amendments thereto, if it is intended to carry limited amounts of hazardous and noxious liquid cargoes in bulk.

Section

1 **General**

2 **Longitudinal strength**

3 **Hull envelope plating**

4 **Hull envelope framing**

5 **Strengthening of bottom forward**

6 **Bottom strengthening for loading and unloading aground**

7 **Watertight bulkheads**

■ *Section 1* General

1.1 Application

1.1.1 This Chapter applies, in general, to manned or unmanned non-self-propelled ships defined as follows:

(a) Barges for the carriage of general dry cargoes in cargo holds.
(b) Barges for the carriage of liquid cargoes in bulk.
(c) Pontoons designed specifically for the carriage of non-perishable cargo on deck.
(d) Shipborne barges for the carriage of general dry cargo in cargo holds and intended to operate afloat only within specified geographical limits, and suitable for regular carriage on board a larger ship.

1.1.2 Manned or unmanned barges for the carriage of liquid chemicals in bulk and barges for the carriage of liquefied gases will receive individual consideration on the basis of the Rules, *see* Table 5.1.1.

Table 5.1.1 Applicable Rules

Type of barge	Applicable Rules
Barge for the carriage of general dry cargo in cargo hold	Chapter 1
Barge for the carriage of liquid cargo in bulk	Chapter 10
Pontoon designed specifically for the carriage of non-perishable cargo on deck	Chapter 1
Shipborne barges for the carriage of general dry cargo in cargo holds	Chapter 1 and this Chapter for 'extended protected water service' barges
Barge for the carriage of liquid chemicals in bulk	*Rules for Ships for Liquid Chemicals in Bulk*
Barge for the carriage of liquefied gases	*Rules for Ships for Liquefied Gases*

1.1.3 The scantlings and arrangements, except where otherwise specified in this Chapter, are to comply with the Rules as indicated in Table 5.1.1.

1.1.4 The Rules assume that the structural arrangements of barges carrying cargo in holds will generally approximate to normal ship shape and construction. Barges of this type not doing so will receive individual consideration on the basis of the Rules.

1.1.5 The Rules also assume that barges and pontoons are homogeneously loaded. Barges or pontoons with other types of loading, e.g. crane pontoon, will receive individual consideration.

1.1.6 All barges and pontoons are to be fitted with adequate arrangements for towing. In general, such arrangements are to consist of, or be equivalent to, not less than two sets of bollards, each of which shall be suitable for accepting a towline of suitable breaking strength.

1.2 Class notations

1.2.1 In general, ships complying with the requirements of this Chapter will be eligible for one of the following classes:

(a) **100A1 barge**. This class will be assigned to non-self-propelled sea-going ships as defined in 1.1.1(a).
(b) **100A1 oil barge**. This class will be assigned to non-self-propelled sea-going ships as defined in 1.1.1(b).
(c) **100A1 pontoon**. This class will be assigned to non-self-propelled sea-going ships as defined in 1.1.1(c).

1.2.2 Barges and pontoons intended to be operated only in suitable areas or conditions which have been agreed by the Committee, as defined in Pt 1, Ch 2,2.3.6 to 2.3.10, will receive individual consideration on the basis of the Rules with respect to the environmental conditions agreed for the design basis and approval. In particular, shipborne barges as defined in 1.1.1(d) complying with the requirements of this Chapter will be eligible to be classed **100A1 shipborne barge extended protected water service**.

1.2.3 The Regulations for classification and the assignment of class notations are given in Pt 1, Ch 2, to which reference should be made.

1.3 Information required

1.3.1 In addition to the information and plans required by Pt 3, Ch 1,5, the following are to be submitted:

- Details of structure and fittings to which deck cargo securing lashings, etc., are attached.
- Details of the bollards and their supporting structure.
- Where pusher tugs or integral tug/barge systems are proposed, full details and data of the attachment and support arrangements.
- Details of the intended service areas required for barges or pontoons designed to operate within specified geographical limits.
- Longitudinal strength and lifting arrangements for shipborne barges.

1.4 Symbols and definitions

1.4.1 The Rule length, *L*, for vessels with swim ends is to be measured as shown in Fig. 5.1.1. Where a swim end is arranged aft but no rudder is fitted, *L* need not exceed 97 per cent of the extreme length on the summer load waterline. For tugs and barge units having rigid connections, the length, *L*, is to be taken as the combined length of the tug and barge.

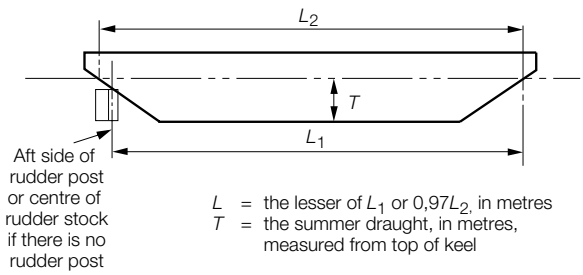

Fig. 5.1.1 Definition of Rule length

■ *Section 2* Longitudinal strength

2.1 General

2.1.1 Longitudinal strength calculations are to be made in accordance with the requirements given in Pt 3, Ch 4, and the ship service factor, f_1, is given in Table 5.2.1.

Table 5.2.1 Ship service factor f_1

Type of ship	f_1	
	'100A1'	'100A1 extended protected water service'
Barge for the carriage of general cargo in holds and for the carriage of liquid cargoes in bulk Pontoons for the carriage of non-perishable cargoes on deck	1,0	0,80
Shipborne barges for the carriage of general cargo in holds and unmanned	—	0,70

2.1.2 The requirements of Pt 3, Ch 4,8.3 regarding loading instruments are not applicable to barges and pontoons.

2.1.3 For shipborne barges, where it is the intention to lift the barge on board ship by crane, a condition 'fully loaded barge suspended by crane' is to be submitted. For this condition the following stresses are permissible:

Bending stress σ_b = 147,2 N/mm^2 (15,0 kgf/mm^2)

Shear stress τ = 98,1 N/mm^2 (10,0 kgf/mm^2)

■ *Section 3* Hull envelope plating

3.1 Shell and deck plating

3.1.1 The thickness of shell and deck plating is to be as necessary to give the hull section modulus required by 2.1 and to satisfy the requirements listed in Table 5.3.1.

Table 5.3.1 Shell and deck plating

Item of plating	Thickness for ships classed 100A1	Thickness for ships having extended protected water service notation
(a) Keel	The separate requirements of Chapter 1 or Chapter 10, whichever is applicable, for keel width and thickness need not be applied, except where *L* > 100 m and the bottom has a rise of floor	
(b) Bottom shell and bilge	In accordance with the requirements of Chapter 1 or Chapter 10, whichever is applicable	In accordance with the requirements of Chapter 1 or Chapter 10, whichever is applicable, reduced by 12,5 per cent, but is to be not less than required by (c) below
	For chines, *see* 3.1.2	
(c) Side shell from upper turn of bilge or chine to deck	The greater of the values obtained from Chapter 1 or Chapter 10, whichever is applicable, for the appropriate framing arrangement	
(d) Deck	In accordance with the requirements of Chapter 1 or Chapter 10, whichever is applicable	In accordance with the requirements of Chapter 1 or Chapter 10, whichever is applicable, reduced by 2 mm, but is to be not less than the deck basic end thickness as required by Pt 3, Ch 5 and Ch 6
	In pontoon barges with deck cargoes the deck thickness derived from (d) may be required to be increased	
(e) Swim ends	The bottom shell plating thickness is to be maintained up to the summer load waterline for the rake plating. Above this point the thickness may be tapered to that of the side shell requirements from a point not less than 1 m above the load waterline	

3.1.2 On ships with two chines each side, the bilge plating should generally be calculated from the bottom plating formulae. On hard chine ships, flanged chines will not, in general, be approved, but where a chine is formed by knuckling the shell plating, the radius of curvature, measured on the inside of the plate, is to be not less than 10 times the plate thickness. Where a solid round chine bar is fitted, the bar diameter is to be not less than three times the thickness of the thickest abutting plate. Where welded chines are used, the welding is to be built up as necessary to ensure that the shell plating thickness is maintained across the weld.

■ *Section 4* Hull envelope framing

4.1 Symbols

4.1.1 The symbols used in this Section are defined as follows:

- h = head or load height, in metres, and is to be taken as:
  for bottom longitudinals, frames, girders and transverses: the depth D
  for side longitudinals: the distance of the longitudinal below the deck at side, but not less than $0{,}01L + 0{,}7$
  for side transverses: the distance from the midpoint of span to the deck at side, but not less than $0{,}01L + 0{,}7$
  for deck longitudinals and transverses: the head equivalent to cargo carried at a stowage rate of 1,39 m^3/tonne, but is not to be taken less than $0{,}01L + 0{,}7$
  for side frames: the distance from the midpoint of span to the deck at the side
  for deck beams and girders: the head equivalent to cargo carried at a stowage rate of 1,39 m^3/tonne, but is not to be taken less than required by Table 3.5.1 in Pt 3, Ch 3
- l_e = effective length of stiffening member, in metres, *see* Pt 3, Ch 3,3
- s = spacing of frames, beams or longitudinals, in mm
- S = spacing or mean spacing of girders, transverses or floors, in metres
- Z = section modulus of stiffening member, in cm^3, *see* Pt 3, Ch 3,3.

4.2 General

4.2.1 Bottom, side and deck transverses are to be connected in such a manner as to ensure continuity of the transverse ring system, and longitudinals are to be attached to transverses. In way of deck and bottom transverses, a deep web frame is to be fitted.

4.2.2 End connections of longitudinals at bulkheads are to provide adequate fixity and direct continuity of longitudinal strength.

4.2.3 Brackets at the top and bottom of side frames are to extend to the adjacent deck or bottom longitudinal to which they are to be attached.

4.2.4 In pontoons where truss arrangements, comprising top and bottom girders in association with pillars and diagonal bracing, are used in the support of the deck loads, the diagonal members are generally to have angles of inclination with the horizontal of about 45° and cross-sectional area of approximately 50 per cent of the adjacent pillar in accordance with Ch 1,4.4, with a head in accordance with 4.1.1.

4.2.5 Adequate support must be provided on the centreline for the loads imposed on the structure when the ship is in dry-dock.

4.3 Longitudinal framing

4.3.1 The scantlings of bottom, side and deck longitudinals are to comply with the requirements of Table 5.4.1.

Table 5.4.1 Longitudinal framing

Position of longitudinals	Modulus, in cm^3
Bottom	* $Z = 11{,}0 l_e^2 sh \times 10^{-3}$
Side shell	* $Z = 8{,}0 l_e^2 sh \times 10^{-3}$
Deck	* $Z = 5{,}5 l_e^2 sh \times 10^{-3}$
	* For the requirements for barges carrying liquid cargoes in bulk *see* Chapter 10
NOTE The scantlings derived from above need not exceed the scantling requirements of Chapter 1 or Chapter 10, whichever is applicable.	

4.4 Transverse framing

4.4.1 The scantlings of bottom and side frames and deck beams are to comply with the requirements of Table 5.4.2.

Table 5.4.2 Transverse framing

Position of member	Modulus, in cm^3
Bottom and side frames	* $Z = 9{,}5 l_e^2 sh \times 10^{-3}$
Deck beams	* $Z = 4{,}5 l_e^2 sh \times 10^{-3}$
	* For the requirements for barges carrying liquid cargoes in bulk *see* Chapter 10
NOTE The scantlings derived from above need not exceed the scantling requirements of Chapter 1 or Chapter 10, whichever is applicable.	

4.5 Primary supporting structure

4.5.1 Primary supporting members are to comply with the requirements of Table 5.4.3.

Table 5.4.3 Primary supporting structure

Position of member	Modulus, in cm^3
Bottom transverse	* $Z = 11{,}0 l_e^2 Sh$
Side transverse	* $Z = 8{,}0 l_e^2 Sh$ (may be reduced by 5 per cent for vessels classed '100A1 extended protected water service')
Deck transverse	* $Z = 5{,}5 l_e^2 Sh$
Bottom girder	* $Z = 9{,}5 l_e^2 Sh$
Deck longitudinal girder	* $Z = 5{,}0 l_e^2 Sh$
	* For the requirements for barges carrying liquid cargoes in bulk *see* Chapter 10
NOTE The scantlings derived from above need not exceed the scantling requirements of Chapter 1 or Chapter 10, whichever is applicable.	

■ *Section 5*
Strengthening of bottom forward

5.1 Application

5.1.1 The requirements for strengthening of bottom forward detailed in Pt 3, Ch 5 do not apply to barges or pontoons less than 50 m in length.

■ *Section 6*
Bottom strengthening for loading and unloading aground

6.1 Application

6.1.1 For barges or pontoons intended to load or unload while aground, *see* Pt 3 Ch 9,13.

■ *Section 7*
Watertight bulkheads

7.1 Collision bulkheads

7.1.1 Barges and pontoons are to have a collision bulkhead extending intact to the strength/weather deck and, in general, this is to be positioned as detailed in Table 5.7.1.

Table 5.7.1 Collision bulkhead position

Length *L*, in metres	Distance of collision bulkhead aft of fore end of *L*, in metres, *see* Fig. 5.1.1	
	Minimum	Maximum
≤ 150	0,05*L*	0,05*L* + 4,5
> 150	The lesser of: 0,05*L* or 10	0,08*L*

Section

1 **General**

2 **Protection**

3 **Longitudinal strength**

4 **Deck structure**

5 **Shell envelope plating**

6 **Shell envelope framing**

7 **Watertight bulkheads**

8 **Stern ramp, and cruiser and transom sterns**

9 **Strengthening of bottom forward**

Section 1
General

1.1 Application

1.1.1 This Chapter applies to sea-going steel trawlers, stern trawlers and fishing vessels.

1.1.2 For the purpose of this Chapter, a fishing vessel is a ship used for fishing operations, but not equipped for trawling.

1.1.3 The scantlings and arrangements are to be as required by Chapter 1 except as otherwise specified in this Chapter. Consideration will be given to proposals for modified scantlings on vessels where *L* is less than 24 m.

1.2 Assignment of load lines

1.2.1 The *International Convention on Load Lines, 1966* does not apply to trawlers and fishing vessels, but certain National Authorities may request the assignment of load lines for ships registered in their countries.

1.2.2 The Rules affecting the protection of openings and protection of crew, and particularly those contained in Pt 3, Ch 11 and Ch 12, may be modified to take account of National Regulations or practicabilities related to fishing operations.

1.3 Class notations

1.3.1 In general, ships complying with the requirements of this Chapter will be eligible for one of the following classes:

(a) **100A1 trawler**. This class will be assigned to side fishing trawlers.

(b) **100A1 stern trawler**. This class will be assigned to stern fishing trawlers.

(c) **100A1 fishing vessel**. This class will be assigned to fishing vessels, *see* 1.1.2.

1.3.2 The Regulations for classification and the assignment of class notations are given in Pt 1, Ch 2 to which reference should be made.

1.4 Information required

1.4.1 In addition to the information required by Pt 3, Ch 1,5, the position and arrangement of trawl gear and deck machinery and location of insulated compartments are to be indicated.

1.5 Symbols and definitions

1.5.1 The Rule length, *L*, is the distance, in metres, on the classification waterline from the fore side of the stem to the after side of the rudder post, or to the centre of the rudder stock if there is no rudder post. *L* is to be not less than 96 per cent, and need not be greater than 97 per cent, of the extreme length on the classification waterline.

1.5.2 Breadth *B*, is the greatest moulded breadth, in metres.

1.5.3 Depth *D*, is measured, in metres, at the middle of the length, *L* from the base line to top of the deck beam at side on the uppermost continuous deck.

1.5.4 The classification waterline in single deck ships is the waterline taken perpendicular to the plane of the transverse bulkheads located at 0,85*D* from the base line amidships, or at the maximum operational draught amidships, whichever is the greater. In two-deck ships, it is the waterline located at the maximum operational draught, but if this is unknown, it may be taken at 50 mm below the lower deck. If a load line is required by a National Authority, the classification waterline is the summer load waterline.

1.5.5 Keel line is the line parallel to the slope of the keel intersecting the top of the keel at amidships, or the line of intersection of the inside of shell plating with the keel where a bar keel is fitted.

1.5.6 Base line is a line parallel to the classification waterline and intersecting the keel line at amidships.

1.5.7 Draught *T*, is the distance in metres, between the classification waterline and the base line amidships.

1.5.8 The block coefficient C_b is to be taken at the classification waterline.

1.5.9 The following symbols are also applicable to this Chapter:

k = material factor, *see* Ch 1,1.5

l_e = effective length of stiffening member, in metres, *see* Pt 3, Ch 3,3

s = spacing of stiffeners, in mm

s_b = $470 + \frac{L}{0,6}$ with minimum limitation at ends as defined in Table 5.3.1 in Pt 3, Ch 5, for fore end structure and Table 6.3.1 in Pt 3, Ch 6, for aft end structure

s_1 = s, but not less than s_b

t = thickness of plating, in mm

Z = section modulus of stiffening member, in cm^3, *see* Pt 3, Ch 3,3.

■ *Section 2* Protection

2.1 Protection of steelwork

2.1.1 Where wood sheathing is fitted, the material is to be of good quality, well seasoned and free from sapwood, and the thickness is to be not less than 65 mm. The plank widths should not normally exceed 150 mm. Thwartship planks are to be laid at the ends of deckhouses and at break of deck. Fastenings are to be sunk below the surface of the planking and covered with turned dowels, and the whole to be thoroughly bedded in a suitable composition. All weather decks are to be caulked and payed.

2.1.2 Where gutter waterways are fitted, the bar forming the inner edge of the waterway is to be not less than 7,5 mm thick.

2.1.3 Welded studs are to be not less than 9,5 mm diameter, and are to be coated with suitable composition before the planking is laid. Bolts used instead of studs may be 12,5 mm diameter galvanized. If the steel deck is penetrated for bolts, the deck is to be hose tested in accordance with Pt 3, Ch 1,8.

2.2 Protection of cargo

2.2.1 When an oil fuel bunker or double bottom carrying oil fuel, or a lubricating oil tank, is adjacent to a fish hold, the relevant requirements of Pt 6, Ch 3,4 are to be complied with.

2.2.2 Compartments used for the processing of fish, or for temporary storage during or while awaiting processing, need not comply with the requirements of 2.2.1, but the construction of the bulkheads, decks and insulation, if any, should be such as to minimize the risk of oil leakage.

■ *Section 3* Longitudinal strength

3.1 General

3.1.1 The longitudinal strength standard is to comply with the relevant requirements of Pt 3, Ch 4.

3.1.2 The requirements of Pt 3, Ch 4,8.3 regarding loading instruments are not applicable to trawlers and fishing vessels.

■ *Section 4* Deck structure

4.1 Deck plating

4.1.1 The thickness of deck plating is to be not less than that required by Ch 1,4. Under the trawl winch, windlass, mast, centre and side bollards and gallows, the plating thickness is to be not less than:

$$t = (0,04L + 7,5) \text{ mm}$$

where L is to be taken not less than 30 m.

4.1.2 When a raised deck is fitted, adequate scarfing is to be arranged at the step.

4.2 Factory deck beams

4.2.1 The section modulus of the beams of factory decks under fish handling spaces is to be not less than that required by Table 1.4.5(2) in Chapter 1, with h_2 equal to 2 m, but extra strengthening may be required in way of heavy items of machinery or equipment.

■ *Section 5* Shell envelope plating

5.1 Shell plating

5.1.1 The thickness of shell plating is to be not less than that required by Ch 1,5 but in no case is it to be less than the following:

For $L \leq 70$ m $\quad t = (5,5 + 0,033L)\sqrt{\frac{ks_1}{s_b}}$ mm

For $L > 70$ m $\quad t = (6,5 + 0,033L)\sqrt{\frac{ks_1}{s_b}}$ mm

5.1.2 For single deck side trawlers the thickness derived from the formulae in 5.1.1 is to be increased by 10 per cent.

5.1.3 When nets or control wires are in contact with the ship's side, such as below the gallows in a side trawler, the side shell plating is to be increased by 40 per cent.

5.1.4 Where a bar keel is fitted, the breadth of the garboard strake is to be not less than 760 mm, and the thickness is to be 10 per cent greater than the bottom shell.

5.1.5 The thickness of the bottom shell plating is to be increased by 10 per cent where intercostal girders are not fitted.

5.1.6 For increase to sheerstrake at the break of a raised deck, *see* Ch 1,5.

5.1.7 Cope irons are to be fitted under gallows or any other area where excessive wear could occur.

■ *Section 6* Shell envelope framing

6.1 Transverse side framing

6.1.1 The section modulus of the side frames of single deck trawlers and fishing vessels need not be greater than 80 per cent of the modulus required by Ch 1,6, but in no case is the depth of the frame to be less than 60 mm. Where not specified the draught is to be taken as not less than 0,85*D*.

6.1.2 For two deck trawlers and two deck fishing vessels and all vessels requiring a load line, the requirements of Ch 1,6 are to be complied with.

6.1.3 The section modulus of frames in the fore peak is to be the greater of the following:

(a) 10 per cent greater than that required by Pt 3, Ch 5,4.

(b) $Z = (45D - 212)$ cm^3

6.1.4 The section modulus of frames in the aft end region is to be not less than that required by Pt 3, Ch 6,3.

6.1.5 Where frames are stopped at watertight flats they are to be bracketed.

■ *Section 7* Watertight bulkheads

7.1 Collision bulkheads

7.1.1 Consideration will be given to proposals for the collision bulkhead to be positioned further aft than 0,08*L* from the fore end of the classification waterline, provided that bow damage will not result in excessive trim forward.

■ *Section 8* Stern ramp, and cruiser and transom sterns

8.1 Stern ramp

8.1.1 The thickness of plating of the stern ramp is to be not less than:

$t = 0{,}025s$ mm or 10 mm, whichever is the greater.

8.1.2 The section modulus of stiffeners is to be not less than:

$Z = 0{,}019s\, l_e^2$ cm^3

8.2 Cruiser and transom sterns

8.2.1 Cruiser and transom sterns are to have frames of the size required for peaks, and are to be additionally stiffened by web frames when required. The depth of plate floors is to be not less than that given in Ch 1,7, and the floors are to be associated with a suitable system of girders.

■ *Section 9* Strengthening of bottom forward

9.1 General

9.1.1 The requirements of Pt 3, Ch 5,1 are to be applied except when the forward draught contemplated for any sea-going condition is equal to or greater than 0,03*L* in which case the bottom shell plating in the region to be strengthened may be taken as:

$t = 0{,}00818s\, f\, L^{1/4}\, k^{1/2}$

where the symbols are as defined in Table 5,1.1 in Pt 3, Ch 5. This thickness derivation may be adopted for both longitudinal and transverse framing.

Section

1 **General**

2 **Materials and protection**

3 **Longitudinal strength**

4 **Deck structure**

5 **Shell envelope plating**

6 **Shell envelope framing**

7 **Topside tank structure**

8 **Double bottom structure**

9 **Hopper side tank structure**

10 **Bulkheads**

11 **Direct calculation**

12 **Steel hatch covers**

13 **Hatch coamings**

14 **Forecastles**

■ *Section 1* General

1.1 General

1.1.1 This Chapter applies to sea-going self propelled ships, constructed generally with single deck double bottom, hopper side tanks and topside tanks and with single or double side skin construction in the cargo length area, and intended primarily for the carriage of bulk dry cargoes.

1.1.2 A 'bulk carrier of single side skin construction' is defined as a bulk carrier where one or more cargo holds are bound by the side shell only, or by two watertight boundaries, one of which is the side shell, which are less than 1000 mm apart.

1.1.3 The term 'bulk carrier of double side skin construction' is defined as a bulk carrier where all cargo holds are bound by two watertight boundaries, one of which is the side shell, which are greater than or equal to 1000 mm apart at any location within the hold length.

1.1.4 The 'ShipRight Procedures' for the hull construction of ships are detailed in Pt 3, Ch 16 and the classification notations and descriptive notes associated with these procedures are given in Pt 1, Ch 2,3.

1.1.5 The attention of Owners, Masters and Cargo Shippers is drawn to the IMO Code of Safe Practice for Solid Bulk Cargoes when shipping these cargoes. Attention is also drawn to any relevant statutory requirements of the National Authority of the country in which the ship is to be registered, and any special requirements of the Port Authorities at the ports of loading and discharge.

1.1.6 The Regulations for classification and the assignment of class notations are given in Pt 1, Ch 2 to which reference should be made.

1.2 Application

1.2.1 Single skin and double skin bulk carriers with length, *L*, greater than or equal to 90 m with structural configuration as shown in Fig. 7.1.1 are defined as '*CSR Bulk Carriers*' and are to comply with 1.4.

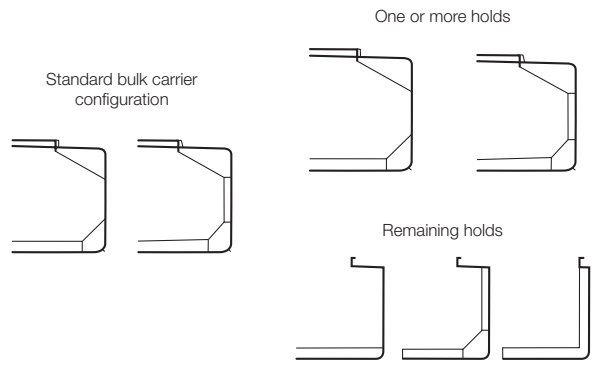

Fig. 7.1.1 CSR-BC applicability

1.2.2 Single skin and double skin bulk carriers other than those described in 1.2.1 are defined as '*Non-CSR Bulk Carriers*' and are to comply with 1.5.

1.3 General class notations

1.3.1 Class notations applicable to CSR bulk carriers are defined as follows:

- **CSR**
  Identifies the bulk carrier as being compliant with the *IACS Common Structural Rules for Bulk Carriers;*
- **ESP**
  Identifies the bulk carrier as being subject to an Enhanced Survey Programme as detailed in Pt 1, Ch 3,3 and Ch 3,6, *see also* Pt 1, Ch 2,2.3.12.

1.3.2 Class notations applicable to non-CSR bulk carriers are defined as follows:

- **Strengthened for heavy cargoes**
  For bulk carriers with scantlings complying with 8.2;
- **ESP**
  Identifies the bulk carrier as being subject to an Enhanced Survey Programme as detailed in Pt 1, Ch 3,3 and Ch 3,6, *see also* Pt 1, Ch 2,2.3.12;
- **ESN**
  Identifies the bulk carrier as having been assessed for enhanced survivability with respect to flooding. Scantlings and arrangements are to comply with 3.1.2, 8.8 and 10.4.

1.4 Class notation for CSR bulk carriers

1.4.1 In general, CSR bulk carriers less than 150 m in length are to comply with the requirements of 1.6, Pt 3, Ch 2 and the *IACS Common Structural Rules for Bulk Carriers* (CSR) and will be eligible for one of the following mandatory class notations:

(a) **100A1 bulk carrier, CSR, {any holds may be empty}, ESP.** This class notation is normally assigned to a ship designed to carry dry bulk cargoes of cargo density 1,0 tonne/m^3 and above, with an approved arrangement of loaded holds such that any hold may be empty at the full loaded draught.

(b) **100A1 bulk carrier, CSR, {holds *a*, *b*, ... may be empty}, ESP.** This class notation is normally assigned to a ship designed to carry dry bulk cargoes of cargo density 1,0 tonne/m^3 and above with specified holds empty at maximum draught.

(c) **100A1 bulk carrier, CSR, ESP.** This class notation will be assigned to a ship designed to carry dry bulk cargoes of cargo density less than 1,0 tonne/m^3.

1.4.2 In general, CSR bulk carriers equal to or greater than 150 m in length are to comply with the requirements of 1.6, Pt 3 Ch 2 and the *IACS Common Structural Rules for Bulk Carriers* (CSR) and will be eligible for one of the following mandatory class notations:

(a) **100A1 bulk carrier, CSR, BC-A, {holds *a*, *b*, ... may be empty}, GRAB [X] ESP.** This class will be assigned for bulk carriers designed to carry dry bulk cargoes of cargo density 1,0 tonne/m^3 and above with specified holds empty at maximum draught.

(b) **100A1 bulk carrier, CSR, BC-B, GRAB [X], ESP.** This class will be assigned for bulk carriers designed to carry dry bulk cargoes of cargo density 1,0 tonne/m^3 and above with all cargo holds loaded.

(c) **100A1 bulk carrier, CSR, BC-C, ESP**. This class will be assigned for bulk carriers designed to carry dry bulk cargoes of cargo density less than 1,0 tonne/m^3 with all cargo holds loaded.

1.4.3 The following additional notations and annotations are to be provided giving further detailed description of limitations to be observed during operation as a consequence of the design loading condition applied during the design.

- **Notations:**
  (maximum cargo density (in tonnes/m^3)) For notations **BC-A** and **BC-B** if the maximum cargo density is less than 3,0 tonnes/m^3;
  (no MP) For all notations when the vessel has not been designed for loading and unloading in multiple ports in accordance with the conditions specified in *IACS Common Structural Rules for Bulk Carriers* (CSR) Ch 4,7.3.3;
  GRAB [X] where the net thickness of inner bottom, lower strake of hopper tank sloping plate and transverse lower stool plating comply with *IACS Common Structural Rules for Bulk Carriers* (CSR) Ch 12,1 for **BC-A** and **BC-B**, *see also* CSR Ch 1,1;
- Annotations:
  (allowed combination of specified empty holds). For notation **BC-A**.

1.4.4 The 'Construction Monitoring' (CM) procedures detailed in the *ShipRight Procedures Manual*, published by LR, are mandatory for bulk carriers greater than 190 m in length.

1.4.5 Optional notations indicating compliance with specific requirements of Sections 3 to 14 on a voluntary basis may also be assigned.

1.5 Class notation for non-CSR bulk carriers

1.5.1 In general, non-CSR Bulk Carriers are to comply with the requirements of 1.5.2 to 1.5.7 and will be eligible for one of the following mandatory class notations:

(a) **100A1 bulk carrier, ESP.**

(b) **100A1 bulk carrier, strengthened for heavy cargoes, ESP.** This class notation will be assigned to a ship when the double bottom structure has been specially strengthened in accordance with the requirements of Table 7.8.1.

(c) **100A1 bulk carrier, strengthened for heavy cargoes, {holds a, b, ... may be empty}, ESP**. This class notation is normally assigned to a ship which has been specially strengthened for heavy cargoes (*see* (b), so as to enable the ship to be fully loaded with an approved arrangement of empty holds, *see also* 1.3.5 and 1.4.3.

(d) **100A1 bulk carrier, strengthened for heavy cargoes, {any holds may be empty}, ESP.** This class notation is normally assigned to a ship which has been specially strengthened for heavy and ore cargoes, with an approved arrangement of loaded holds such that any hold may be empty at the full loaded draught.

1.5.2 Plans and information are to be submitted in accordance with 1.7.

1.5.3 Requirements are also given for special strengthening for heavy cargoes, *see* 8.2.

1.5.4 The scantlings and arrangements of the cargo region are to be as specified in this Chapter in Sections 2 to 14. The requirements are intended to cover the midship region, but also apply, with suitable modification, to the taper regions forward and aft in way of cargo spaces.

1.5.5 The 'Structural Design Assessment' **(SDA)**, 'Fatigue Design Assessment' **(FDA)** and 'Construction Monitoring' **(CM)** procedures detailed in the *ShipRight Procedures Manual*, published by LR, are mandatory for non-CSR bulk carriers greater than 190 m in length and for other non-CSR bulk carriers of abnormal hull form, or of unusual structural configuration or complexity *see* 1.1.5 and Section 11.

1.5.6 Where the class notation referred to in 1.5.1(d) is assigned such that any hold may be empty at the full draught the following items are to be considered and the corresponding requirements complied with:

(a) Longitudinal strength calculations are to be carried out for all the operational fully loaded, non-homogeneous, part loaded, heavy cargo conditions, and these conditions included in the approved Loading Manual, *see* Section 3. Envelopes of the still water bending moments and the shear forces covering these conditions are also to be submitted.
(b) The double bottom structure in each hold is to satisfy the requirements of 8.4.
(c) The arrangement and scantlings of cross-deck structure between the upper deck cargo hatchways, *see* 4.1.2.
(d) Transverse bulkheads in holds, *see* 10.1.4.
(e) For main cargo hatchway openings the requirements of 4.3.1 are to be complied with.

1.5.7 Where appropriate, other cargoes or particular loading arrangements will be included in the class notation. When the class notation referred to in 1.5.1(c) is to be assigned for other combinations of empty and loaded holds, for example where it is the intention to load fully any two adjoining holds with adjacent holds empty in sea-going or short voyage conditions, the longitudinal and local strength aspects will be specially considered, *see also* 4.1.2. In addition, permissible weights of cargo in each hold or pair of adjacent holds, plotted against ship's draught likely to be incurred, is to be included in the ship's approved Loading Manual.

1.5.8 The scantlings of structural items may be determined by direct calculation.

1.5.9 The additional requirements for bulk carriers for the alternate carriage of oil cargo and dry bulk cargo are given in Ch 9,11. When complying with the requirements of this Chapter, such ships may be excluded from all requirements and notations pertaining to vessels with length, *L*, greater than or equal to 150 m. The requirements of 1.5.5 are however to be complied with.

1.6 Information required for CSR bulk carriers

1.6.1 In addition to the plans and documents required by the CSR the following are to be submitted:

- Ice strengthening.
- Freeboard plan or equivalent showing freeboards and items relative to the conditions of assignment.
- In addition the supporting calculations given in Pt 3, Ch 1,5.2.3 are to be submitted.

1.7 Information required for non-CSR bulk carriers

1.7.1 In addition to the information and plans required by Pt 3, Ch 1,5, the following are to be submitted:

- Cargo loadings on decks, hatchways and inner bottom if these are to be in excess of Rule, *see* Pt 3, Ch 3,5.
- The maximum pressure head in service on tanks, also details of any double bottom tanks interconnected with hopper, and topside tanks.
- Details of the proposed depths of any partial fillings where water ballast or liquid cargo is intended to be carried in the holds.
- Details of loading arrangements where combinations of empty and loaded holds are envisaged, and where it is the intention to load fully any two adjoining holds with adjacent holds empty in sea-going or short voyage conditions.

1.7.2 Additional information required for bulk carriers of length, *L*, 150 m or above:

- The bulk cargo density to be used in the design homogeneous loading condition at scantling draught with all holds, including hatchways, being 100 per cent full.
- The maximum bulk cargo density the ship is designed to carry.
- The maximum bulk cargo weight to be carried in each hold.
- Tables or curves indicating the change of cargo hold volume as a function of height above moulded baseline.

1.8 Symbols and definitions

1.8.1 The following symbols and definitions are applicable to this Chapter unless otherwise stated: *L*, *B*, *D*, *T* as defined in Pt 3, Ch 1,6

k_L, k = higher tensile steel factor, *see* Pt 3, Ch 2,1
l = overall length of stiffening member, in metres, *see* Pt 3, Ch 3,3
l_e = effective length of stiffening member, in metres, *see* Pt 3, Ch 3,3
s = spacing of secondary stiffeners, in mm
t = thickness of plating, in mm
C = stowage rate, in m^3/tonne, as defined in Pt 3, Ch 3,5
I = inertia of stiffening member, in cm^4, *see* Pt 3, Ch 3,3
M_H = the actual cargo mass in a cargo hold corresponding to a homogenously loaded condition at maximum draught
M_{Full} = the cargo mass in a cargo hold corresponding to cargo with virtual density (homogenous mass/hold cubic capacity, minimum 1,0 tonne/m^3) filled to the top of the hatch coaming. M_{Full} is in no case to be less than M_H
M_{HD} = the maximum cargo mass allowed to be carried in a cargo hold according to design Loading conditions with specified holds empty at maximum draught
R = sin θ
S = spacing, or mean spacing, of primary members, in metres

Z = section modulus of stiffening member, in cm^3, *see* Pt 3, Ch 3,3

ρ = relative density (specific gravity) of liquid carried in a tank, and is not to be taken less than 1,025.

θ = roll angle, in degrees

$$\sin\theta = \left(0{,}45 + 0{,}1\frac{L}{B}\right)\left(0{,}54 - \frac{L}{1270}\right)$$

Section 2 Materials and protection

2.1 Materials and grades of steel

2.1.1 Materials and grades of steel are to comply with the requirements of Pt 3, Ch 2.

2.2 Protection of steelwork

2.2.1 For the protection of steelwork, in addition to the requirements specified in Ch 1,2 and Pt 3, Ch 2,3 the requirements of 2.2.2 are to be complied with.

2.2.2 All internal and external surfaces of hatch coamings and hatch covers, and all internal surfaces of the cargo holds, except where excluded below, are to have an efficient protective coating (epoxy coating or equivalent) applied in accordance with the manufacturer's recommendations. In the selection of coating, due consideration is to be given to the intended cargo conditions in service. Areas which may remain uncoated are:

(a) The inner bottom plating.

(b) The hopper tank sloping plating between the intersection with the inner bottom plating and a line approximately 300 mm below the toe of the side shell frame end brackets.

2.2.3 For the notation '**strengthened for regular discharge by heavy grabs**', *see* Pt 3, Ch 9,13.

Section 3 Longitudinal strength

3.1 General

3.1.1 Longitudinal strength calculations are to be made in accordance with the requirements given in Pt 3, Ch 4 and 1.5.6 and 1.5.7 where appropriate.

3.1.2 Longitudinal strength calculations for the flooded conditions defined in 3.2 to 3.4 are to be applied for bulk carriers which satisfy all of the following criteria:

- Single skin construction.
- Length, L, of 150 m or above.
- Intended for the carriage of cargoes having bulk densities of 1,0 tonne/m^3 or above.

3.2 Hull vertical bending stresses for flooded conditions

3.2.1 The maximum hull vertical bending stresses in the flooded condition at deck, σ_{Df}, and keel, σ_{Bf}, for use in Pt 3, Ch 4 are given by the following, using the appropriate combination of bending moments to give sagging and hogging stresses:

$$\sigma_{Df} = \frac{|M_{sf} + 0{,}8M_w| \times 10^{-3}}{Z_D} \quad \text{N/mm}^2\ (\text{kgf/mm}^2)$$

$$\sigma_{Bf} = \frac{|M_{sf} + 0{,}8M_w| \times 10^{-3}}{Z_B} \quad \text{N/mm}^2\ (\text{kgf/mm}^2)$$

where

M_{sf} = maximum still water bending moment in the flooded condition, in kN m (tonne-f m), at the section under consideration, *see* 3.4

M_w = design hull vertical wave bending moment, in kN m (tonne-f m), as defined in Pt 3, Ch 4,5 at the section under consideration

Z_D, Z_B = actual hull section moduli, in m^3, at strength deck and keel respectively, at the section under consideration.

3.2.2 The maximum values of σ_{Df} and σ_{Bf} are to be used in Pt 3, Ch 4.

3.3 Shear stresses for flooded conditions

3.3.1 The shear stress, τ_{Af}, in the flooded condition to be used in Pt 3, Ch 4,6, is to be taken as:

$$\tau_{Af} = 100Az\,\frac{|Q_{sf}| + |0{,}8Q_w|}{I\,\delta_i}\ \text{N/mm}^2$$

$$\left(\tau_{Af} = 10{,}2Az\,\frac{|Q_{sf}| + |0{,}8Q_w|}{I\,\delta_i}\ \text{kgf/mm}^2\right)$$

where

Az = the first moment, in cm^3, about the neutral axis, of the area of the effective longitudinal members between the vertical level under consideration and the vertical extremity of the effective longitudinal members, taken at the section under consideration

Q_{sf} = maximum hull still water shear force, in kN (tonne-f), in the flooded condition at the section under consideration

Q_w = design hull wave shear force, in kN (tonne-f), as defined in Pt 3, Ch 4,6.3 at the section under consideration

I = moment of inertia of the hull about the horizontal neutral axis, in cm^4, at the longitudinal section under consideration

δ_i = as defined in Pt 3, Ch 4,6.5.

3.4 Flooded conditions

3.4.1 For the relevant loading conditions specified in Pt 3, Ch 4,5.3 and 5.4, each cargo hold is to be considered individually flooded up to the equilibrium waterline, except that cargo holds of double skin construction of not less than 1000 mm breadth at any location within the hold length, measured perpendicular to the side shell need not be

considered flooded. The shear forces and still water bending moments are to be calculated for the most severe flooded conditions which will significantly load the ship's structure. Harbour conditions, docking conditions afloat, loading and unloading transitory conditions in port and loading conditions encountered during ballast water exchange need not be considered.

3.4.2 In calculating the weight of ingressed water into the cargo hold under consideration, the permeabilities and bulk densities given in Table 7.3.1 are to be used.

Table 7.3.1 Permeability and bulk density factors

Hold condition	Permeability (*see* Note 1)	Bulk density (tonne/m^3)
Empty cargo space	0,95	—
Volume left in loaded cargo spaces above any cargo	0,95	—
Iron ore cargo	0,3 (*see* Note 2)	3,0
Cement	0,3 (*see* Note 2)	1,3

NOTES
1. Bulk cargo permeability is defined as the ratio of the voids within the cargo mass to the volume occupied by the cargo.
2. More specific information relating to the bulk cargo may be used where available, but permeabilities are not to be less than those given above.
3. For packed cargo, the actual density of the cargo is to be used with a permeability of zero.

3.4.3 In calculating the strength of the ship's structure in the flooded condition it is to be assumed that the ship's structure will remain fully effective in resisting the applied loads.

■ *Section 4* Deck structure

4.1 General

4.1.1 Longitudinal framing is, in general, to be adopted outside line of openings. The arrangement of structure between hatches is to be such as to ensure continuity of the main deck structure to resist athwartship forces, and transverse stiffening is to be arranged. For and aft knuckles in cross deck strip plating between hatches should be arranged close to longitudinal girders or supported by brackets.

4.1.2 In the case of large bulk carriers with narrow deck strips between hatchways, or where it is the intention to fully load any two adjoining holds with adjacent holds empty for a sea-going condition or for bulk carriers to be classed 'any hold may be empty', the cross deck scantlings will be specially considered.

4.1.3 The requirements of Ch 1,4 are to be applied, together with the requirements of this Section.

4.1.4 The *ShipRight FDA Procedure, Structural Detail Design Guide* (SDDG), indicates recommended structural design configurations in critical areas, for the deck structure outside the line of openings and between hatches.

4.2 Deck plating

4.2.1 Where the difference between the thickness of plating inside and outside the line of main hatches exceeds 12 mm, a transitional plate of thickness equivalent to the mean of the adjacent plate thicknesses is to be fitted. The plate thickness outside the line of hatches is to be continued inboard between hatches beyond the end of the hatch corner curvature, to ensure that the chamfered plating is clear of the corner tangent point.

4.3 Main cargo hatchway openings

4.3.1 The following requirements apply to bulk carriers with vertically corrugated transverse bulkheads in cargo holds having one or more of the following characteristics:

(a) $B \geq 40$ m

(b) $\frac{b}{w} \geq 2{,}2$

b = breadth of deck opening
w = width of cross deck strip
B = moulded breadth of ship

(c) A structural arrangement where the hatch side coaming and deck opening are arranged inboard of the topside tank.

(d) All bulk carriers to be classed 100A1 bulk carrier, strengthened for heavy cargoes, any hold may be empty, ESP.

4.3.2 The corners of main cargo hatchways in the strength deck are to be rounded with a radius not less than $^1/_{20}$ of the breadth of the opening, with a maximum radius of 1000 mm.

4.3.3 Insert plates are to be fitted at the corners having a thickness not less than 25 per cent greater than the adjacent deck thickness outside the line of openings, with a minimum increase of 5 mm, *see also* 4.3.4.

The corner inserts are to be extended transversely into the cross deck plating for a minimum distance equal to 0,075b, where b, is the breadth of deck opening.

4.3.4 For the extreme corners of the end hatchways of the cargo region furthest from amidships the thickness of the corner insert plates is to be not less than 60 per cent greater than the adjacent deck thickness outside the line of openings.

4.4 Deck supporting structure

4.4.1 For the scantlings of deck longitudinals and transverses in way of topside tanks, *see* 7.4 and 7.5, respectively.

Section 5
Shell envelope plating

5.1 General

5.1.1 Longitudinal framing is, in general, to be adopted at the bottom, but special consideration will be given to proposals for transverse framing in this region. The side shell may be longitudinally or transversely framed.

5.1.2 The requirements of Ch 1,5 are to be applied together with the requirements of this Section.

5.2 Bottom shell

5.2.1 The thickness of the bottom shell plating below loaded holds may be required to be increased for local strength considerations.

5.3 Side shell

5.3.1 The thickness of the side shell plating may be required to be increased for shear forces to satisfy the requirements of 3.2.1.

5.3.2 The thickness of the side shell plating located between the hopper and topside tanks of single skin bulk carriers is to be not less than:

$$t = \sqrt{L} \text{ mm}$$

Section 6
Shell envelope framing

6.1 Longitudinal stiffening

6.1.1 Side frames of all single skin bulk carriers with a hopper are to comply with 6.2 and 6.3.

6.1.2 Side frames and end brackets of all double skin bulk carriers are to comply with Ch 1,6.

6.1.3 Side frames and end brackets of other structural configurations will be specially considered.

6.1.4 The end connections for the longitudinal stiffening are to satisfy the requirements of Pt 3, Ch 10,3, *see also* 7.6.1 and 9.7.1.

6.1.5 The arrangements at the intersections of continuous secondary and primary members are to satisfy the requirements of Pt 3, Ch 10,5.2 and Ch 1,6.2.

6.2 Transverse stiffening

6.2.1 The modulus and inertia of main and topside tank frames in the midship region are to comply with the requirements given in Table 7.6.1. Arrangements of main frames in holds in association with web frames are not recommended in view of the vulnerability to cargo handling damage. Where such web frames are proposed the arrangements and scantlings will be specially considered.

Table 7.6.1 Shell framing

Location	Modulus, in cm^3	Inertia, in cm^4
(1) Main frames in dry cargo holds	$Z = 3{,}50skh_{T1}H^2 \times 10^{-3}$	$I = \frac{3{,}2}{k} HZ$
(2) Main frames in cargo holds used for water ballast	The greater of the following: (a) Z = 1,15 x modulus given in (1) (b) $Z = 6{,}7skh_4 H^2 \times 10^{-3}$	$I = \frac{3{,}2}{k} HZ$
(3) Transverse frames in topside wing tanks	The greater of the following: (a) 1,15 x Z as given in location (1) of Table 1.6.2 in Chapter 1 (b) As required by 7.3.1 for the sloped bulkhead stiffeners	$I = \frac{3{,}2}{k} HZ$

Symbols

D, T, s, k as defined in 1.7.1

h_{T1} = head, in metres, at middle of H

$= C_w \left(1 - \frac{h_6}{D-T}\right) F_\lambda$, in metres, for frames where the mid-length of frame is above the summer load waterline,

$\left(1 - \frac{h_6}{D-T}\right)$ is not to be taken less than 0,7

$= \left(h_6 + C_w \left(1 - \frac{h_6}{2T}\right)\right) F_\lambda$, in metres, where the mid-length of frame is below the summer load waterline

h_4 = head, in metres, measured from the middle of H to the deck at side, or half the distance from the middle of H to the top of the overflow, whichever is greater.

h_6 = vertical distance in metres, from the summer load waterline at draught T to the mid-length of H

C_w = a wave head, in metres
$= 7{,}71 \times 10^{-2} L e^{-0{,}0044L}$
where e = base of natural logarithms 2,7183

F_λ = 1,0 for $L \le 200$ m
= $(1{,}0 + 0{,}0023(L - 200))$ for $L > 200$ m

H = length overall of frame, in metres, but is to be taken not less than 2,5 m

6.2.2 Main frames in the cargo and ballast holds are to have a web thickness not less than:

- In general:
  t_{min} = 7 + 0,03*L* mm,
  or 13 mm whichever is the lesser
- In the foremost hold:
  t_{min} = 1,15 (7 + 0,03*L*) mm,
  or 15 mm whichever is the lesser

where *L* is the Rule length, in metres.

6.2.3 The web depth to thickness ratio of the frames is not to be greater than:

$60\sqrt{k}$, for symmetric sections

$50\sqrt{k}$, for asymmetric sections

The breadth to thickness ratio of the flange outstand is not to be greater than:

$10\sqrt{k}$

6.2.4 The upper and lower end brackets of the main frames in the cargo and ballast holds are to satisfy the requirements of 6.2.5 to 6.2.14 inclusive, based on the mild steel section modulus *Z* in cm^3, derived from Table 7.6.1, or the equivalent mild steel section modulus for higher tensile steel frames.

6.2.5 The lengths of the arms of the brackets, measured as shown in Fig. 7.6.1, are not to be less than:

(a) Frame connection to hopper tank.
Athwartship arm:
Dry cargo hold $l_a = 32{,}43\sqrt{Z}$ mm

Ballast hold $l_a = 32{,}43\left(\sqrt{Z} - 7{,}5\right)$ mm

Vertical arm:
Dry cargo hold $l_v = 27{,}6\sqrt{Z}$ mm

Ballast hold $l_v = 27{,}6\left(\sqrt{Z} - 9{,}0\right)$ mm

(b) Frame connection to topside tank
Athwartship arm:
Dry cargo hold $l_a = 30{,}0\sqrt{Z}$ mm

Ballast hold $l_a = 30{,}0\left(\sqrt{Z} - 9{,}0\right)$ mm

Vertical arm:
Dry cargo hold $l_v = 26{,}85\sqrt{Z}$ mm

Ballast hold $l_v = 26{,}85\left(\sqrt{Z} - 11{,}0\right)$ mm

In no case are the bracket arm lengths to be taken less than 0,125*H*, where *H* is as defined in Table 7.6.1.

6.2.6 The section modulus of the frame and bracket or integral bracket, and associated shell plating at the location marked Z_a in Fig. 7.6.1 is to be not less than 2,0*Z*.
In addition, the minimum depth of the frame and bracket or integral bracket at the location indicated in Fig. 7.6.1 is to be not less than 1,5*d*.

6.2.7 The upper and lower integral or separate brackets are to have a web thickness not less than the as built web thickness of the side frame. In addition, the lower bracket thickness is to be not less than:

$t = t_{min} + 2$ mm, where t_{min} is derived from 6.2.2

The toes of the brackets are to be designed to avoid notch effects by making the upper and lower toes concave or otherwise tapering them off, *see also* Pt 3, Ch 10,5.1.7.

6.2.8 Except as indicated in 6.2.9, frames are to be fabricated symmetrical sections with integral upper and lower brackets. The side frame face plate is to be curved (not knuckled) at the connection with the end brackets. The radius of curvature, *r*, is to be not less than:

$$r = \frac{0{,}4 b_f^{\,2}}{t_f} \text{ mm}$$

where
b_f = breadth of the bracket face plate, in mm
t_f = thickness of the bracket face plate, in mm

The brackets are to be arranged with soft toes and the frame section face bar tapered symmetrically to the toes with a taper rate not exceeding 1 in 3. Where the free edge of the bracket is hollowed out, it is to be stiffened or increased in size to ensure that the section modulus of the bracket through the throat is not less than that of the required straight edged bracket.

6.2.9 In ships of length, *L*, less than 190 m, mild steel fabricated frames may be asymmetric and fitted with separate brackets. Brackets are to be arranged with soft toes. The free edges of the brackets are to be stiffened as follows:

(a) Where a flange is fitted, its breadth, b_f, is to be not less than:

$$b_f = 40\left(1 + \frac{Z}{1000}\right) \text{ mm}$$

or 50 mm, whichever is the greater.
The flange is to be tapered at the ends with a taper rate not exceeding 1 in 3.

(b) Where the edge is stiffened by a welded face flat, the cross-sectional area of the face flat is to be not less than:
(i) $0{,}009 b_f t$ cm^2 for offset edge stiffening
(ii) $0{,}014 b_f t$ cm^2 for symmetrically placed stiffening
where
t = web thickness of bracket, in mm
The face plate is to be tapered at the ends with a taper rate not exceeding 1 in 3.

6.2.10 For mild steel construction with separate brackets where the frames are lapped on to the bracket, the length of the overlap is to be adequate to provide for the required area of welding to achieve equivalent strength.

6.2.11 Double continuous welding is to be adopted for the connections of frames and brackets to side shell, hopper and topside tank plating and web to face plates. For this purpose, the following weld factors are to be adopted:

- 0,44 in Zone 'a' and
- 0,40 in Zone 'b', *see* Fig. 7.6.1.

Where the hull form is such that an effective fillet weld cannot be made, edge preparation of the web of the frame and bracket may be required, in order to ensure the required efficiency of the weld connection.

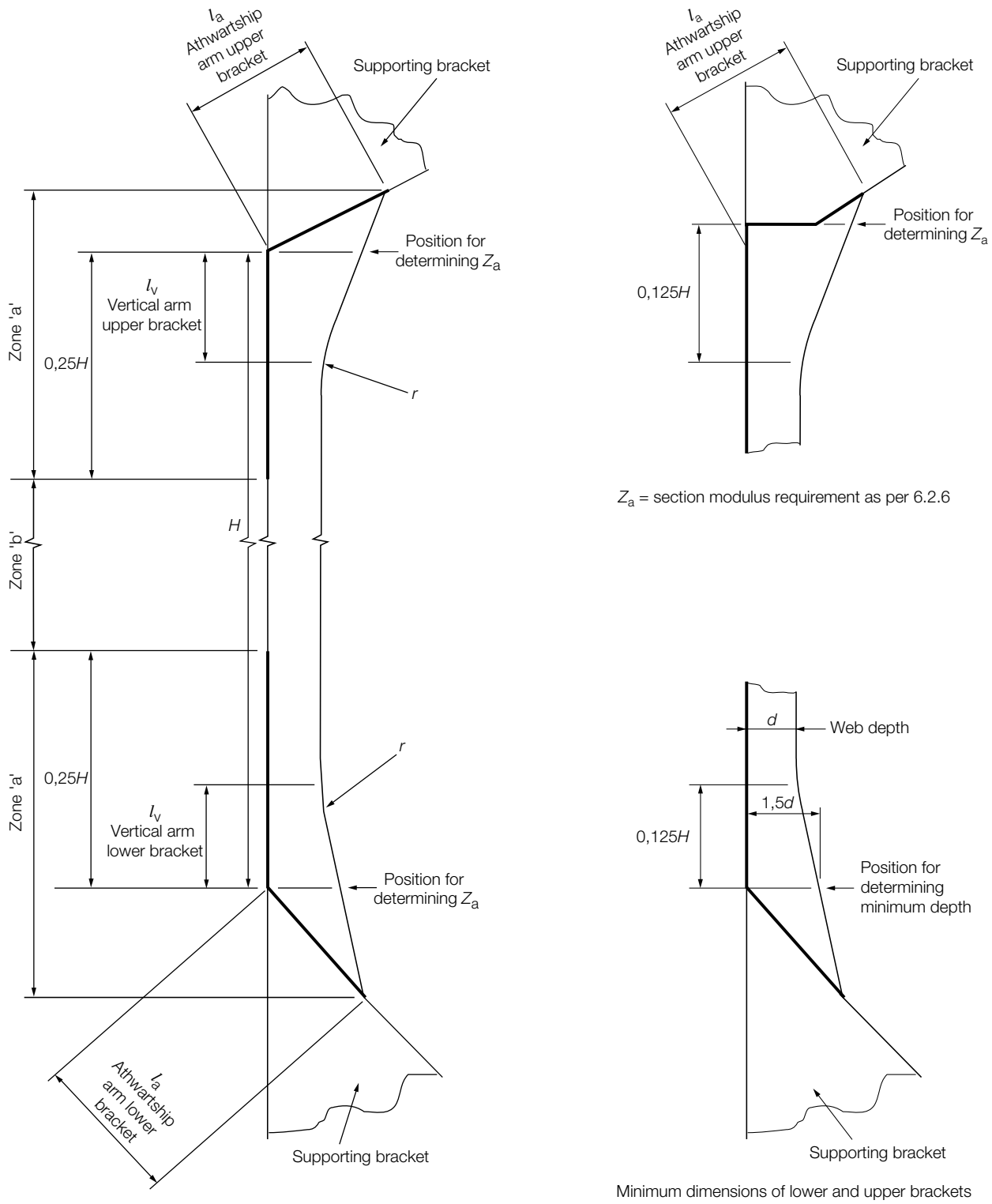

Fig. 7.6.1 Diagrammatic arrangement of end brackets

6.2.12 Continuity of the frames is to be maintained by supporting brackets, *see* Fig. 7.6.2, in the topside and hopper tanks. The design of end connections and their supporting structure is to be such as to provide adequate resistance to rotation and displacement of the joint. For this purpose, in the hopper and topside tanks, the thickness of the supporting brackets (which must align with the hold main frame brackets) is to be not less than the following:

(a) Lower brackets (In hopper tank):

$t = t_{min} + 0{,}5$ mm, where t_{min} is derived from 6.2.2, or

$t = 9{,}0$ mm

whichever is the greater.

(b) Upper brackets (in topside tank):

$t = t_{min}$, where t_{min} is derived from 6.2.2, or

$t = 9{,}0$ mm

whichever is the greater.

The size and arrangement of stiffening of the supporting brackets will be specially considered. Where the toe of the hold frame bracket is situated on or in close proximity to the first longitudinal from the shell of the hopper or topside tank sloped bulkheads, the supporting brackets are to be extended to the next longitudinal. This extension is to be achieved by enlarging the supporting bracket or by fitting an intercostal flat bar stiffener the same depth as the longitudinal and connected to the webs of the longitudinals.

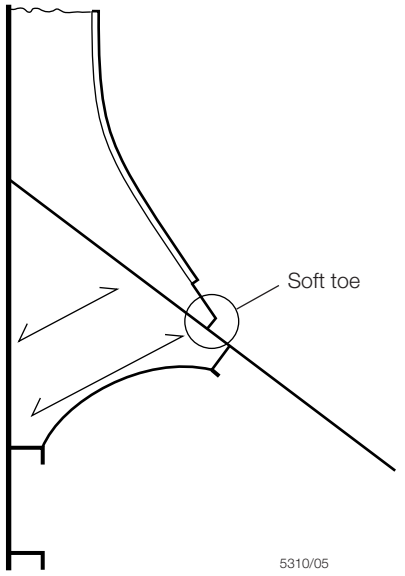

Fig. 7.6.2
Supporting brackets in topside and hopper tanks

6.2.13 The requirements are to be maintained throughout the cargo hold region. However, in the forward and aft cargo holds where the shape becomes finer because of the ship form, increased requirements may be necessary and each case will be specially considered.

6.2.14 In way of the foremost hold, side frames of asymmetric section are to be effectively supported by intercostal brackets, *see* Fig. 7.6.3.

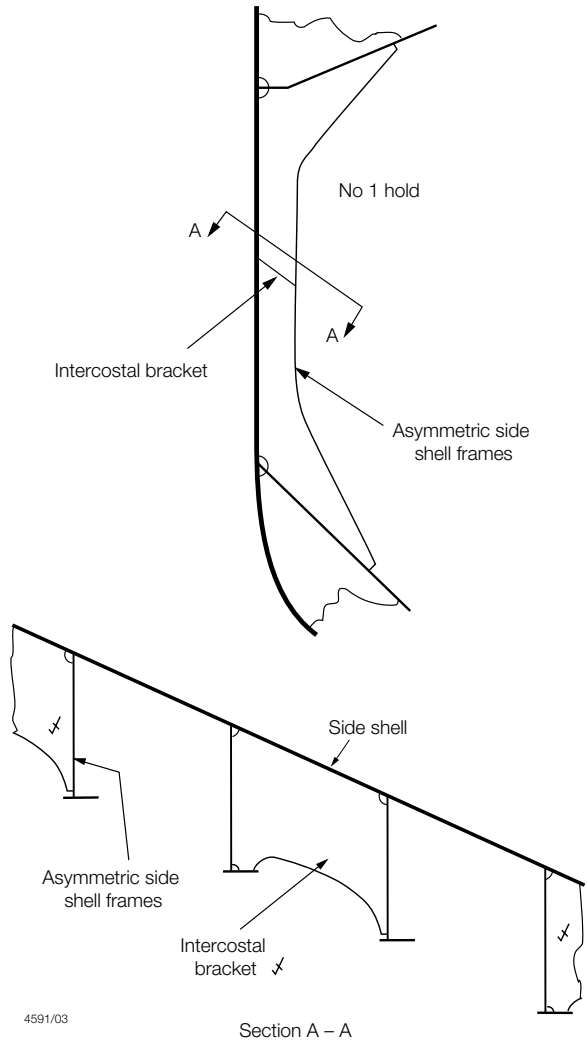

Fig. 7.6.3
Typical arrangement of intercostal brackets supporting asymmetric side shell frames in No. 1 hold

6.2.15 The hold side shell frame adjacent to the collision bulkhead is to be suitably strengthened. As an alternative, at least two supporting structures are to be fitted which align with the forepeak stringers or flats, *see* Fig. 7.6.4. The supporting structures are to have adequate cross sectional shear resisting area at their connections to the hold frame.

6.2.16 Detail design guidelines for connection of side shell frames to hopper and topside tank plating are shown in the *ShipRight FDA Procedure, Structural Detail Design Guide* (SDDG).

6.3 Primary supporting structure

6.3.1 For the requirements for primary supporting structure, *see* 7.5 and 9.6.

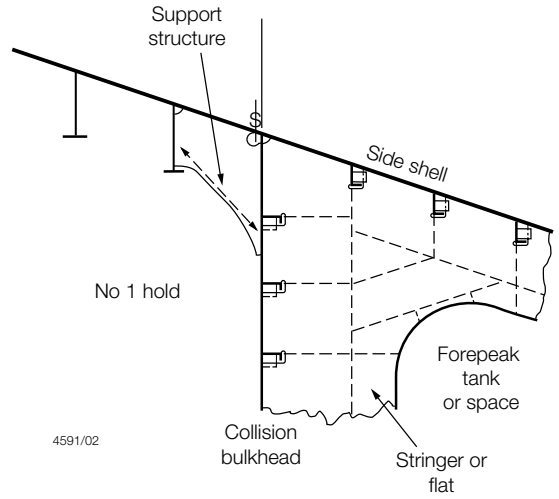

Fig. 7.6.4
Hold frame supporting structures at fore end of No. 1 cargo hold

■ *Section 7* Topside tank structure

7.1 General

7.1.1 Requirements are given in this Section for longitudinal or transverse framing in the topside tank, but, in general, the deck is to be longitudinally framed. The sloped bulkhead is to be of plane construction with the associated stiffening arranged inside or outside the tank.

7.1.2 The buckling requirements of Pt 3, Ch 4,7 are to be satisfied.

7.1.3 Recommended examples of structural design configurations around the transverse ring web of the topside tank can be seen in the *ShipRight FDA Procedure, Structural Detail Design Guide* (SDDG).

7.2 Bulkhead plating

7.2.1 The thickness of the sloped bulkhead, tank end bulkhead, and diaphragm, if fitted, is to be the greater of the following:

(a) For watertight bulkheads, the thickness, t, as derived from Table 1.9.1 in Chapter 1 for a deep tank bulkhead using a head, h_4, in metres determined as follows:

$h_4 = h_o \cos\theta + Rb_1$ or

= the greater of the distance from a point one-third of the height of the plate above its lower edge to the top of the tank, or half the distance to the top of the overflow

whichever is the greater, or

(b) t = 7,5 mm

In no case, however, is the thickness of the sloped bulkhead and diaphragm to be taken less than:

$t = 0{,}012s$ mm, or

$$t = 0{,}012s\sqrt{\frac{F_D}{k_D}} \text{ mm}$$

whichever is the greater

where

k_D = the higher tensile steel factor equal to k_L value for deck material

F_D = as defined in Pt 3, Ch 4,5.6

R = as defined in 1.7.1

h_o = the vertical distance, in metres, from a point one third of the height of the plate from its lower edge to the highest point of the tank excluding hatchway

b_1 = the larger horizontal distance, in metres, from the tank corner at top of tank either side to point of plate under consideration.

7.2.2 The thickness of the top strake of the sloped bulkhead, including the vertical plate attached to deck, may be required to be increased to form an effective girder below the deck. In general, this plate is to be not less in thickness than 60 per cent of the thickness of the deck plate outside the line of openings nor less than:

(a) $t = 0{,}018s$ mm, or

(b) $$t = 0{,}018s\sqrt{\frac{F_D}{k_D}} \text{ mm}$$

whichever is the greater.

7.2.3 The thickness of the transverse wash bulkhead, where fitted, is to be not less than:

$t = 0{,}012s$ mm or 7,5 mm

whichever is the greater.

7.3 Bulkhead stiffeners

7.3.1 The section modulus of longitudinal or transverse stiffeners on the sloped bulkhead or watertight diaphragms, if fitted, is to be not less than:

$$Z = 0{,}01skh_4 l_e^2 \text{ cm}^3$$

where

h_4 = $h_o \cos\theta + Rb_1$

= the greater of the distance, in metres, from the middle of the effective length to the top of the tank, or half the distance to the top of the overflow, or

= 1,5 m

whichever is the greatest

R = as defined in 1.7.1

h_o = the vertical distance, in metres, from the mid-point of span of the stiffener to the highest point of the tank excluding hatchway

b_1 = the larger horizontal distance, in metres, from the tank corner at top of tank, either side to midpoint of span.

7.3.2 Where the bulkhead stiffening is fitted on the hold side of the sloped bulkhead, suitable arrangements are to be made to prevent tripping.

7.3.3 The scantlings of stiffeners on tank end bulkheads are to be not less than those given in Table 1.9.1 in Chapter 1 for deep tanks, using *h* as defined in 7.3.1.

7.3.4 The section modulus of stiffeners of non-watertight fore and aft diaphragms, or transverse wash bulkheads is to be not less than 50 per cent of that required by 7.3.3. The stiffeners are to be bracketed at both ends.

7.3.5 Tank end bulkheads are generally to be in line with the main hold bulkheads.

7.4 Shell and deck structure

7.4.1 The scantlings of shell and deck longitudinals are to comply with 7.3.1. The scantlings must also satisfy the requirements of Chapter 1, *see also* 7.6.1.

7.4.2 The scantlings of side shell frames are to comply with 6.2.

7.5 Primary supporting structure

7.5.1 The section modulus and inertia of deck, shell and bulkhead transverses or stringers are to be not less than:

$$Z = 7{,}5\, k\, S\, h\, l_e^2 \quad \text{cm}^3$$

$$I = \frac{2{,}5}{k}\, l_e\, Z \quad \text{cm}^4$$

using *h* as defined in 7.3.1. The scantlings of shell and deck members must also satisfy the requirements of Chapter 1 for dry cargo holds.

7.5.2 Primary transverse members are, in general, to be spaced not more than 3,8 m apart where the length, *L*, is 100 m or less, and (0,006*L* + 3,2) m apart for lengths greater than 100 m.

7.5.3 Transverses are to be arranged in line with the primary structure at ends of hatchways, or equivalent scarfing arranged. Where the sloped bulkhead or side shell is transversely framed, arrangements are to be made to ensure effective continuity at the ends of the deck transverse.

7.5.4 Where non-watertight transverse diaphragms are arranged instead of open transverses, the thickness of plating is to be in accordance with 7.2.3. The diaphragms are to be efficiently stiffened.

7.6 Structural details

7.6.1 Bracket/diaphragm connections at the bottom of the topside tank are to be of sufficient size and thickness to provide effective rigidity, and care is to be taken to ensure alignment with brackets at the heads of the side frames in the holds, *see also* 6.2.12. The shell and sloped bulkhead longitudinals supporting the diaphragms are to be derived using the span taken between transverses.

7.6.2 For ships where *L* ≥ 300 m a fore and aft diaphragm extending vertically from the deck to the sloping plating of the topside tank is to be arranged at about the half-width of the tank.

7.6.3 Where longitudinal framing is fitted to the side shell, a bracket may be required in way of a rounded gunwale, approximately halfway between transverses and extending to the adjacent shell and deck longitudinal.

■ *Section 8* Double bottom structure

8.1 General

8.1.1 The double bottom is, in general, to be longitudinally framed, but special consideration will be given to proposals for a transverse framing system.

8.1.2 The requirements of Ch 1,8 are to be applied, together with the requirements of this Section, *see also* 2.2.3.

8.1.3 Where the double bottom tanks are interconnected with double skin side tanks or combined hopper and top side tanks, the double bottom scantlings are also to satisfy the requirements of Table 7.8.1(3)(c), (3)(d), (4)(c) and (4)(d) for ballast holds, and (3)(c) and (4)(c) in way of dry cargo holds, *see also* Ch 1,6.2.

8.1.4 The requirements given in 8.8 are to be applied to bulk carriers which satisfy the following criteria:

- Single skin construction.
- Length, *L*, of 150 m or above.
- Intended for the carriage of cargoes having bulk densities of 1,0 tonne/m^3 or above.

8.1.5 For all bulk carriers where bulk cargoes are discharged by grabs the maximum recommended unladen weight of the grab corresponding to the approved inner bottom plating thickness is to be calculated using the following formulae:

$$P = \left(\frac{s}{k}\right)^2 \frac{10^d}{1{,}775} \quad \text{tonnes}$$

where

$$d = \frac{40{,}875\,(t - 1{,}5)\sqrt{k} + 344{,}5}{s} - 5{,}7633$$

P = unladen grab weight, in tonnes
s = spacing of inner bottom longitudinal, in mm
k = higher tensile steel factor as defined in 1.7.1
t = thickness of inner bottom plating, in mm

The maximum recommended unladen weight of the grab rounded up to the next tonne above, is to be recorded in the Loading Manual (*see also* Pt 3, Ch 4,8.2.4(e)) and does not preclude the use of heavier grabs. It is intended as an indication to the Builders, Owners and operators of the increased risk of local damage and the possibility of accelerated diminution of the plating thickness if grabs heavier than this are used regularly to discharge cargo.

Table 7.8.1 Strengthening for heavy cargo requirements

Symbols	Item	Requirement
L, l_e, D, T, s, S, k, Z, and t as defined in 1.7.1 C_1 = a factor varying from 1,0 at $\frac{D}{2}$ to $\frac{75}{225 - 150F_B}$ at base line of ship C = stowage rate, in m^3/tonne, and is defined as the volume of the hold excluding the volume contained within the depth of the cargo hatchway divided by the weight of cargo stowed in the hold. The value is not to be taken greater than 0,865 F_B as defined in Pt 3, Ch 4,5.6 R and θ as defined in 1.5.1 H = height from tank top, at position under consideration, to deck at side amidships, in metres Y_1 = distance from $\frac{D}{2}$ to tank top, in metres h_o = for plating and stiffeners the vertical distance, in metres, from the inner bottom to the highest point of the tank excluding hatchway b_1 = the larger horizontal distance, in metres, from the tank corner at top of tank either side to the point of plate or stiffener under consideration	(1) Double bottom floors	The spacing of floors, generally, is not to exceed 2,5 m. Scantlings are to comply with the requirements of Ch 1,8.5
	(2) Double bottom side girders	The spacing of side girders, generally is not to exceed 3,7 m. Scantlings are to comply with requirements of Ch 1,8.3
	(3) Inner bottom plating, *see* Note 3	The thickness of the inner bottom plating in the holds is to be not less than required by the greatest of the following: (a) $t = 0{,}00136\,(s + 660)\sqrt[4]{k^2LT} + 5$ mm, or (b) $t = 0{,}00455s\sqrt{\frac{Hk}{C}}$ mm, or (c) Where the double bottom tanks are interconnected with double skin side tanks or combined hopper and topside tanks the scantlings are also to satisfy the requirements for deep tanks in Table 1.9.1(b) in Chapter 1, with the load head $h_4 = h_o \cos\theta + Rb_1$ m (d) In way of ballast holds the scantlings are also to satisfy the requirements for deep tanks in Table 1.9.1 in Chapter 1, with the load head h_4, in metres, measured to the deck at centre. but *see also* Pt 3, Ch 9,13 if protection against heavy grabs is desired
	(4) Inner bottom longitudinals, *see* Notes 1 and 2	The section modulus of inner bottom longitudinals is to be not less than the greatest of the following: (a) Z = 85 per cent of the Rule value for bottom longitudinals as given in Table 1.6.1(b) in Chapter 1, or (b) $Z = \frac{0{,}0083s\,l_e^2\,HC_1\,k}{\left(1 - 0{,}233\frac{Y_1}{D}\right)C}$ cm^3, or (c) Where the double bottom tanks are interconnected with double skin side tanks or combined hopper and topside tanks $Z = 0{,}0073sk\,h_4\,l_e^2$ cm^3 where $h_4 = h_o \cos\theta + Rb_1$ m Z is not to be less than the requirements for deep tanks in Table 1.9.1 in Chapter 1, with the load head h_4, in metres, measured to the highest point of the topside tank, or side tank, or (d) In way of ballast holds the section modulus of the longitudinals is to be not less than required for deep tanks in Table 1.9.1 in Chapter 1, with the load head h_4, in metres measured to the deck at centre

NOTES
1. If plate girders are fitted alternately with built or rolled sections, the section modulus as given in (4)(b) may be reduced by 10 per cent.
2. Consideration will be given to the fitting of struts in way of double bottom tanks in ships with homogeneous loading. The arrangement and scantlings are, in general, to be confirmed by direct calculation.
3. *See also* 8.1.5 for the maximum recommended unladen weight of the grab corresponding to the approved inner bottom plating thickness.

8.1.6 Detail design guidelines for stiffeners connecting inner bottom and bottom longitudinals are shown in the *ShipRight FDA Procedure, Structural Detail Design Guide* (SDDG).

8.2 Carriage of heavy cargoes

8.2.1 When the notation 'strengthened for heavy cargoes' is to be assigned, the requirements of Table 7.8.1 are to be complied with.

8.3 Carriage of heavy cargoes with specified or alternate holds empty

8.3.1 For ships strengthened for heavy cargoes and having a class notation permitting specified or alternate holds to be empty, the requirements of 8.2.1 are to be complied with. In addition the scantlings and arrangements of the primary structure are to be confirmed by additional calculations, *see* 11.1.

8.4 Ships to be classed '100A1 bulk carrier, strengthened for heavy cargoes, any hold may be empty, ESP'

8.4.1 For ships to be classed **'100A1 bulk carrier, strengthened for heavy cargoes, any hold may be empty, ESP'**, the requirements of 8.2.1 and 8.3.1 are to be complied with. In addition the value for *C*, the stowage rate in m^3/tonne, as defined in Table 7.8.1, is not to be taken greater than 0,60 for each hold.

8.5 Ballast ducts

8.5.1 Where ballast ducts are arranged in lieu of suction and/or filling pipes, the scantlings will be approved as suitable for a specified equivalent static head of water. This head must not be exceeded in service, and details of methods to ensure this are to be submitted. The continuity of the floors is to be maintained in way of the ducts.

8.6 Structural details in way of double bottom tank and hopper tank knuckle

8.6.1 In all dry holds where the double bottom tank and hopper tank knuckle is of radiused construction and the floor spacing is 2,5 m or greater brackets as shown in Fig. 7.8.1 are to be arranged mid-length between floors in way of the intersection. The brackets are to be attached to the adjacent inner bottom and hopper longitudinals. The thickness of the brackets is to be in accordance with Ch 1,8.5.3 but need not exceed 15 mm. This requirement does not apply where the double bottom tank and hopper tank knuckle is of welded construction.

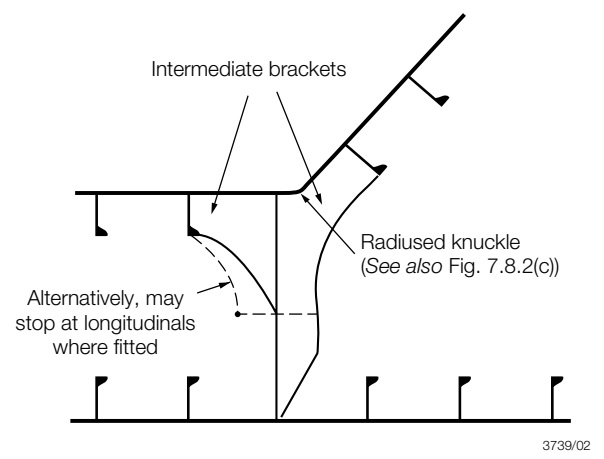

Fig. 7.8.1 Intermediate brackets at knuckle

8.6.2 In way of floodable holds, two intermediate bracket arrangements, as shown in Fig. 7.8.1, are to be provided in all cases where the hopper to double bottom knuckle is radiused and are, in general, to be located at each frame space. Where the double bottom tank and hopper tank knuckle is of welded construction, a single intermediate bracket arrangement, as shown in Fig. 7.8.1, is to be provided only when the floor spacing is greater than 2,5 m.

8.6.3 The connections at the intersection are to be as follows:

(a) Where of welded construction the corner scallops in floors and transverses are to be omitted, or closed by welded collars where arranged for purposes of construction. In such cases to ensure satisfactory welding of the collars the radius of the scallops should not be less than 150 mm, *see* Fig. 7.8.2(a). Alternatively the scallop may be retained on the hopper tank side provided gusset plates are arranged in line with the inner bottom plating, *see* Fig. 7.8.2(b).

(b) Where of radiused construction the corner scallops are to be omitted, and full penetration welding arranged locally for the connection to the inner bottom plating. The centre of the flange is not to be greater than 70 mm from the side girder, *see* Fig. 7.8.2(c).

8.6.4 Detail design guidelines for the connection of hopper tank sloping plating to inner bottom plating are shown in the *ShipRight FDA Procedure, Structural Detail Design Guide* (SDDG).

8.7 Combined double bottom/hopper tank and topside tank

8.7.1 Where a double bottom/hopper tank is interconnected with a topside tank the dimensions of the connecting trunks or pipes, and the air/overflow pipe(s) and the type of closing appliance are to comply with the requirements of Pt 5, Ch 13,10.10.

8.8 Allowable hold loading in the flooded condition

8.8.1 The requirements of this sub-Section are to be applied as defined in 8.1.4.

8.8.2 The maximum load which may be carried in each cargo hold in combination with flood water is to be determined for the most severe homogeneous, non-homogeneous and packed cargo conditions contained in the Loading Manual. The maximum density of cargo intended to be carried in each condition is to be used.

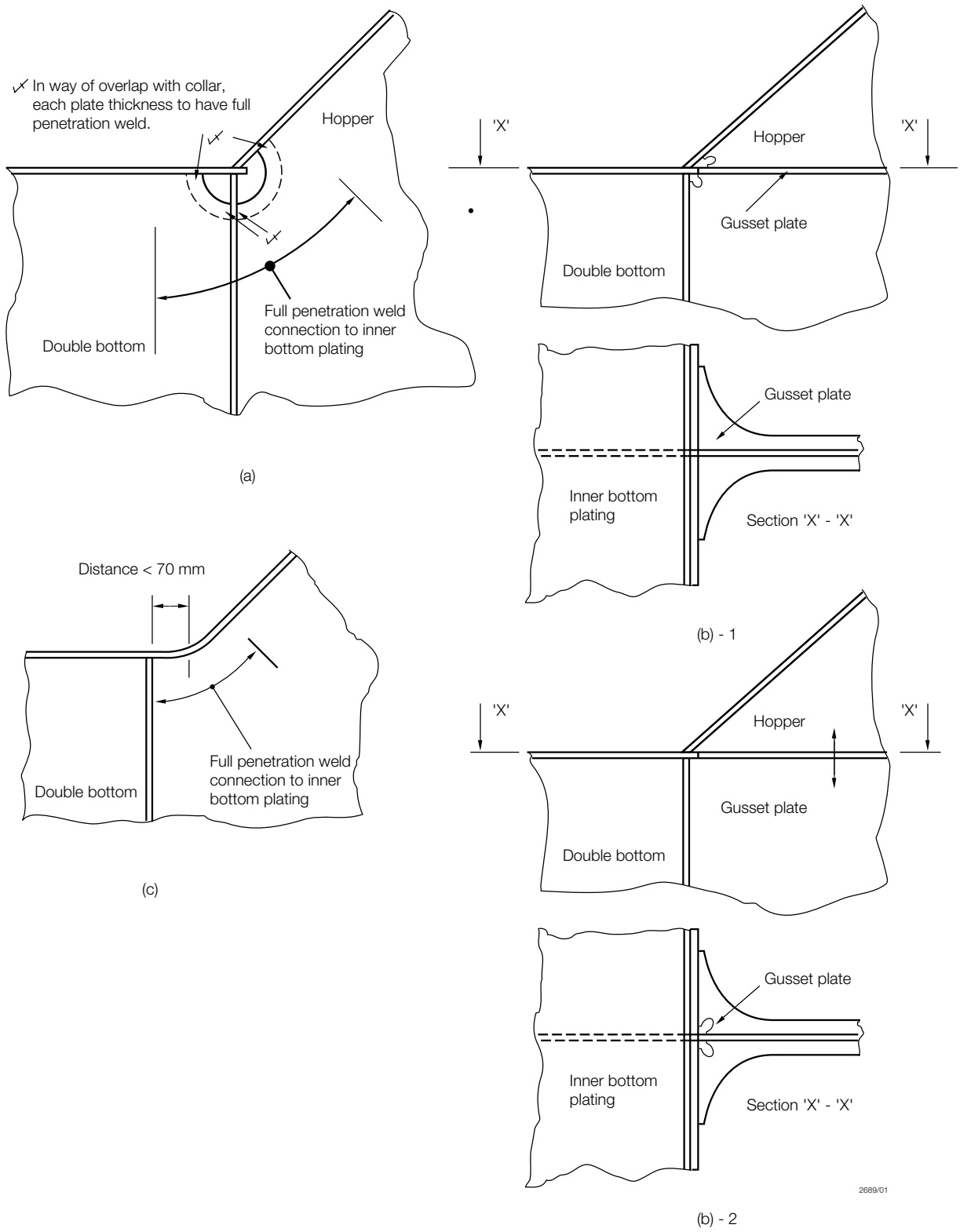

Fig. 7.8.2 Connection at intersection of double bottom and hopper

8.8.3 The ship is to be assumed immersed to the draught, T_F, in metres, in way of the flooded cargo hold under consideration. The flooding head, h_f, *see* Fig. 7.8.3, is to be taken as the distance, in metres, measured vertically with the ship in the upright position, from the inner bottom to position, d_f, in metres, from the base line given by:

(a) In general:
  (i) $d_f = D$ for the foremost hold
  (ii) $d_f = 0{,}9D$ for other holds

(b) For ships less than 50 000 tonnes deadweight with Type B freeboard:
  (i) $d_f = 0{,}95D$ for the foremost hold
  (ii) $d_f = 0{,}85D$ for other holds

where
D = distance, in metres, from the base line to the freeboard deck at side amidships.

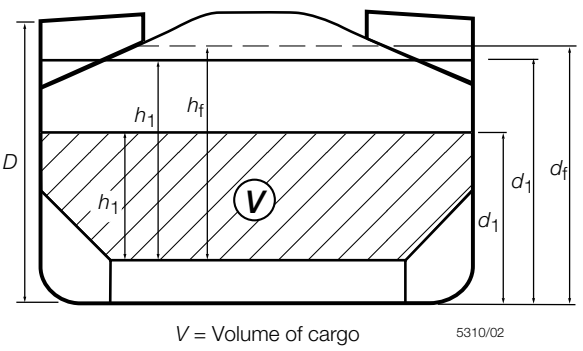

Fig. 7.8.3 Loading

8.8.4 For this application, the double bottom is defined as the structure bounded by the transverse bulkhead lower stools (or bulkhead plating if no lower stools are fitted) and the hopper sides. The floors and girders immediately in way of these structures are excluded.

8.8.5 The determination of shear strength required for the permissible load assessment in 8.8.9, is to be performed using the net plate thickness, t_{net}, for the floors and girders:

$$t_{net} = t - t_c$$

where
t = as built thickness, in mm
t_c = thickness deduction for corrosion, in mm, generally to be taken as 2,5 mm.

8.8.6 Shear capacity of the double bottom is defined as the sum of the shear strengths for:

(a) all the floors adjacent to both hoppers, less one half the strength of the floors adjacent to each lower stool (or transverse bulkhead if no lower stool is fitted), *see* Fig. 7.8.4, and

(b) all the girders adjacent to the lower stools (or transverse bulkheads if no lower stool is fitted).

Where a girder or floor terminates without direct attachment to the boundary stool or hopper side girder, its shear capacity is to include only that for the effectively connected end.

8.8.7 The shear strengths, S_{f1}, of floors adjacent to hoppers and, S_{f2}, of floors in way of openings in bays nearest to the hoppers, are as follows:

$$S_{f1} = 0{,}001\, A_f\, \tau_p/\eta_1 \quad \text{kN (tonne-f)}$$

$$S_{f2} = 0{,}001\, A_{f,h}\, \tau_p/\eta_2 \quad \text{kN (tonne-f)}$$

where
A_f = net sectional area, in mm², of floor panel adjacent to hopper
$A_{f,h}$ = net sectional area, in mm², of floor panel in way of opening in the bay closest to hopper
η_1 = 1,10
η_2 = 1,20 generally
= 1,10 where appropriate reinforcement is fitted in way of the opening
σ_0 = specified minimum yield stress, in N/mm² (kgf/mm²)
τ_p = permissible shear stress, to be taken equal to the lesser of:

$$\tau_0 = \frac{\sigma_0}{\sqrt{3}} \quad \text{N/mm}^2 \text{ (kgf/mm}^2\text{) and}$$

$$\tau_c = \frac{162\,\sigma_0^{0,6}}{\left(\frac{s_1}{t_{net}}\right)^{0,8}} \quad \text{N/mm}^2$$

$$\left(\tau_c = \frac{65\sigma_0^{0,6}}{\left(\frac{s_1}{t_{net}}\right)^{0,8}} \quad \text{kgf/mm}^2\right)$$

where
s_1 = spacing of stiffening members, in mm, for the panel under consideration
t_{net} = net thickness, in mm, of the panel under consideration.

For floors adjacent to the stools (or bulkhead plating if no lower stools are fitted), τ_p may be taken as $\frac{\sigma_0}{\sqrt{3}}$ N/mm² (kgf/mm²).

8.8.8 The shear strengths S_{g1}, of girders adjacent to transverse bulkhead lower stools (or transverse bulkheads if no lower stools are fitted) and, S_{g2}, of girders in way of the largest openings in bays nearest to the lower stools (or transverse bulkheads if no lower stools are fitted), are as follows:

$$S_{g1} = 0{,}001\, A_g\, \tau_p/\eta_1 \quad \text{kN (tonne-f)}$$

$$S_{g2} = 0{,}001\, A_{g,h}\, \tau_p/\eta_2 \quad \text{kN (tonne-f)}$$

where
A_g = net sectional area, in mm², of the girder adjacent to transverse bulkhead lower stool (or transverse bulkhead, if no lower stool is fitted)
$A_{g,h}$ = net sectional area, in mm², of the girder in way of the largest openings in the bays closest to the transverse bulkhead lower stool (or transverse bulkhead if no lower stool is fitted)
η_1 = 1,10
η_2 = 1,15 generally
= 1,10 where appropriate reinforcement is fitted in way of the opening.

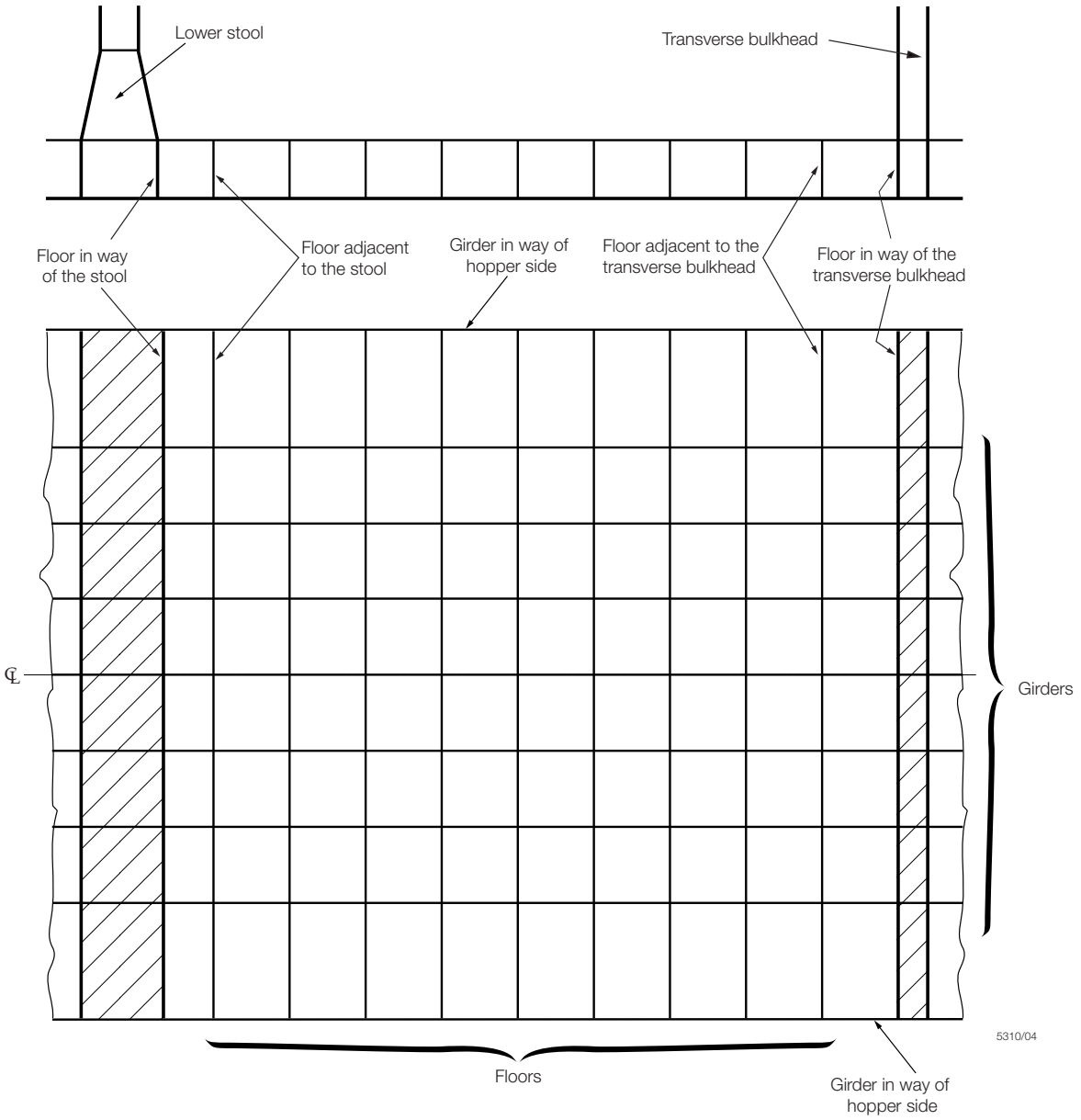

Fig. 7.8.4 Double bottom structure

8.8.9 The permissible cargo hold loading, W_p, is given by:

$W_p = g\,\rho_c\,V/F_c$ kN

($W_p = \rho_c\,V/F_c$ tonne-f)

where

d_f, D = as defined in 8.8.3

g = gravitational constant, 9,81 m/sec^2

h_f = flooding head, in metres, as defined in 8.8.3

$h_1 = \dfrac{X}{\rho_c\,g}$ where Y is in kN/m^2

$\left(h_1 = \dfrac{X}{\rho_c}\right.$ where Y is in tonne-f/m^2$\left.\right)$

n = number of floors between transverse bulkhead lower stools or transverse bulkheads, if no lower stools are fitted

s = spacing, in metres, of double bottom longitudinals adjacent to hoppers

$$A_{DB,e} = \sum_{i=1}^{n} S_i\,(B_{DB} - s)$$

$$A_{DB,h} = \sum_{i=1}^{n} S_i\,B_{DB,i}$$

B_{DB} = breadth of double bottom, in metres, between hoppers, *see* Fig. 7.8.5

$B_{DB,h}$ = distance, in metres, between openings, *see* Fig. 7.8.5

$B_{DB,i}$ = ($B_{DB} - s$) for floors where shear strength is given by S_{f1}

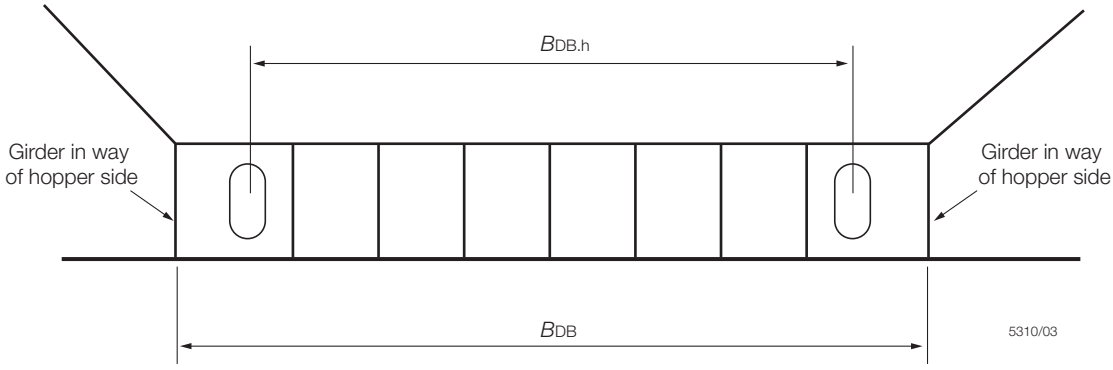

Fig. 7.8.5 Double bottom breadth

= $B_{DB,h}$ for floors where shear strength is given by S_{f2}

C_e = shear capacity of the double bottom, in kN (tonne-f), as defined in 8.8.6, considering for each floor, the shear strength S_{f1}, *see* 8.8.7, and for each girder, the lesser of the shear strengths S_{g1} and S_{g2}, *see* 8.8.8

C_h = shear capacity of the double bottom, in kN (tonne-f), as defined in 8.8.6, considering for each floor, the lesser of the shear strengths S_{f1} and S_{f2}, *see* 8.8.7, and for each girder, the lesser of the shear strengths S_{g1} and S_{g2}, *see* 8.8.8

F_c = 1,1 in general

= 1,05 for steel mill products

S_i = spacing of *i*th floor, in metres

T_F = $d_f - 0{,}1D$

V = volume, in m^3, occupied by cargo at a level h_1

X = the lesser of X_1 and X_2 for bulk cargoes and

X = X_1 for steel mill products

where

$$X_1 = \frac{Y + \rho\, g\, (T_F - h_f)}{1 + \left(\frac{\rho}{\rho_c}\right)(\mu - 1)} \quad \text{where } Y \text{ is in kN/m}^2$$

$$\left(X_1 = \frac{Y + \rho\, (T_F - h_f)}{1 + \left(\frac{\rho}{\rho_c}\right)(\mu - 1)} \quad \text{where } Y \text{ is in tonne-f/m}^2 \right)$$

X_2 = $Y + \rho\, g\, (T_F - h_f\, \mu)$ where Y is in kN/m^2

(X_2 = $Y + \rho\, (T_F - h_f\, \mu)$ where Y is in tonne-f/m^2)

Y = the lesser of Y_1 and Y_2 given by:

$$Y_1 = \frac{C_h}{A_{DB,h}}$$

$$Y_2 = \frac{C_e}{A_{DB,e}}$$

μ = permeability of cargo but need not exceed 0,3

= 0,0 for steel mill products

ρ = density of sea water, 1,025 tonne/m^3

ρ_c = cargo density, in tonne/m^3 (bulk density for bulk cargoes and actual cargo density for steel mill products).

■ *Section 9* Hopper side tank structure

9.1 General

9.1.1 Provision is made in this Section for longitudinal framing of the hopper side tank, but proposals for transverse framing will be specially considered.

9.1.2 Where oil cargoes are carried the scantlings of the sloped bulkhead are to comply with the requirements of 10.2.

9.1.3 For ships to be classed **'100A1 bulk carrier, strengthened for heavy cargoes, any hold may be empty, ESP'**, the requirements of 9.2, 9.3 and 9.6 are to be complied with. In addition the value for C, the stowage rate in m^3/tonne, as defined in Table 7.8.1 is not to be taken greater than 0,60 for each hold.

9.1.4 The buckling requirements of Pt 3, Ch 4,7 are also to be satisfied.

9.1.5 The *ShipRight FDA Procedure, Structural Detail Design Guide* (SDDG), indicates recommended details of structural design configurations around the transverse ring web of the hopper tank.

9.2 Sloped bulkhead plating

9.2.1 The thickness of the sloped bulkhead plating is to be as required by Ch 1,8.4.1 but based on actual spacing of sloped bulkhead stiffeners.

9.2.2 Where the ship is regularly discharged by grabs and the optional notation for heavy grabs is not desired (*see* Pt 3, Ch 9,13) the increase in thickness, as required by Ch 1,2.2, is to be tapered from the inner bottom knuckle to nil at the top corner of the tank.

9.2.3 Where a 'strengthened for heavy cargo notation' is desired, in addition to 9.2.2 the thickness of the sloped bulkhead plating is also to comply with the requirements of Table 7.8.1(3)(b) using the actual spacing of stiffeners and with H, in metres, measured vertically from a point one third of each plate width from its lower edge to the upper deck at side.

9.2.4 Where the hopper tanks are interconnected with the topside tanks, or in way of ballast holds, the plating is also to comply with the requirements of Table 7.8.1(3)(c) and (3)(d), whichever is appropriate.

9.3 Sloped bulkhead stiffeners

9.3.1 The scantlings of sloped bulkhead stiffeners are to be as required for inner bottom longitudinals, *see* Section 8. In ships strengthened for heavy cargoes, the scantlings of the stiffeners are to be derived from Table 7.8.1 using a head for heavy cargo measured vertically from the mid-point of the effective length to the underside of the topside tank sloped bulkhead. Where the hopper tanks are interconnected with the topside tanks, or in way of ballast holds, the scantlings of the stiffeners are also to comply with the requirements of Table 7.8.1(4)(c) and (4)(d), whichever is appropriate. For higher tensile steel longitudinals the requirements of 6.2.3 are to be complied with where applicable, *see also* 9.7.1.

9.4 Shell and bilge stiffeners

9.4.1 The scantlings of the shell and bilge longitudinals are to comply with the requirements of Ch 1,6.

9.5 Tank end bulkheads

9.5.1 The scantlings of tank end bulkheads are to comply with the requirements for deep tanks in Table 1.9.1 in Chapter 1. Where the hopper tanks are interconnected with the topside tanks, the scantlings are to be derived, using the load head h_4, in metres, from Table 7.8.1(3)(c) and (4)(c), as appropriate.

9.6 Primary supporting structure

9.6.1 Transverses supporting longitudinal stiffening are to comply with the requirements of Table 7.9.1, and are to be in line with the double bottom floors.

9.7 Structural details

9.7.1 Bracket/diaphragms at the top of the hopper tank are to be of sufficient size and thickness to provide effective rigidity, and care is to be taken to ensure alignment with brackets at the bottom of the side frames in the holds. The shell and sloped bulkhead longitudinals supporting the diaphragms are to be derived using the span taken between transverses, *see also* 6.2.11.

Table 7.9.1 Hopper tank primary structure

Item	Modulus, in cm^3	Inertia, in cm^4
(1) Bottom and side shell transverses	$Z = 11{,}71\rho k S h l_e^2$	$I = \frac{2{,}5}{k} l_e Z$
(2) Sloped bulkhead transverses	The greater of: (a) $Z = 11{,}71\rho k S h_1 l_e^2$ (b) $Z = 6{,}6\frac{k S H_H l_e^2}{C}$	$I = \frac{2{,}5}{k} l_e Z$ $I = \frac{1{,}85}{k} l_e Z$
Symbols		
S, k, l_e, Z, I, ρ as defined in 1.7.1 h = distance, in metres, from the mid-point of the effective length to the upper deck at side h_1 = the greater of the distance, in metres, from the midpoint of the effective length to the top of the tank or half the distance, in metres, to the top of the overflow, or in way of cargo oil or ballast holds: the distance from the tank top to the deck at centre, or where the hopper tank is interconnected with the topside tank: the load head h_4, as derived from Table 7.8.1(4)(c), whichever is the greatest C = stowage rate, in m^3/tonne, as defined in Table 7.8.1. For bulk carriers without the notation 'strengthened for heavy cargoes', the value to be used is 1,39 m^3/tonne. For bulk carriers with the notation 'strengthened for heavy cargoes', the actual stowage rate is to be used, but the value is not to be taken greater than 0,865 m^3/tonne H_H = distance, in metres, measured vertically from the mid-point of the effective length to the underside of the topside tank sloped bulkhead		

■ *Section 10* Bulkheads

10.1 General

10.1.1 The requirements of Ch 1,9 are to be applied, together with the requirements of this Section.

10.1.2 Where vertically corrugated transverse watertight bulkheads are fitted, the scantlings and arrangements are also to satisfy the requirements of 10.4 to 10.6. Other transverse watertight bulkhead types will be specially considered.

10.1.3 In way of ballast holds, the scantlings are to satisfy the requirements of Table 1.9.1 in Chapter 1 for deep tanks with the load head, h_4, in metres, taken to the deck at centre. This includes the scantlings of vertically corrugated and double plate transverse bulkheads supported by stools. In addition, the thickness of corrugations is to be not less than given by 10.5.8 for watertight corrugated bulkheads. Alternatively, the scantlings may be based on direct calculations which are to be submitted.

10.1.4 All bulk carriers to be classed **'100A1 bulk carrier, strengthened for heavy cargoes, any hold may be empty, ESP'** are to be arranged with top and bottom stools. The requirements of 10.2 are to be complied with as appropriate.

10.2 Bulkheads supported by stools

10.2.1 The stools are to be reinforced with plate diaphragms or deep webs, and in bottom stools the diaphragms are to be aligned with double bottom side girders. Continuity is also to be maintained between the diaphragms and the bulkhead corrugations for 90° corrugations.

10.2.2 The sloping plate of bottom stools is to be aligned with double bottom floors. Particular attention is to be given to the through-thickness properties of the inner bottom plating and continuity at the connection to the inner bottom, and to the through-thickness properties of the bottom stool shelf plate. *See* Ch 3,8 of the Rules for Materials (Part 2) regarding requirements for plates with specified through thickness properties.

10.2.3 An efficient system of reinforcement is to be arranged in line with the hold transverse bulkheads or bulkhead stools at the intersection with the sloped plating of the hopper and topside tanks. The reinforcement fitted in the tanks is to consist of girders or intercostal bulb plate or equivalent stiffeners fitted between, and connected to, the sloped bulkhead longitudinals.

10.2.4 The shelf plates of the bulkhead stools are to be arranged to align with the longitudinals in the hopper and topside tanks. Where sloping shelf plates are fitted to stools, suitable scarfing is to be arranged in way of the connections of the stools to the adjoining structures.

10.2.5 The *ShipRight FDA Procedure, Structural Detail Design Guide* (SDDG), indicates recommended structural design configurations in the critical areas of the lower stool and of the upper boundaries.

10.3 Structural details in way of holds confined to dry cargoes

10.3.1 In dry cargo holds where transverse bulkheads are arranged without bottom stools, the stiffeners and brackets of plane bulkheads, and rectangular corrugations of corrugated bulkheads, are to be aligned with floors and inner bottom longitudinals. In the case of non-rectangular corrugations, the flanges are to be aligned with floors, but consideration will be given to the fitting of a substantial transverse girder in place of one of the floors.

10.3.2 Where transverse corrugated bulkheads are arranged without top stools, transverse beams are to be arranged under the deck in way.

10.4 Vertically corrugated transverse watertight bulkheads – application and definitions

10.4.1 Where corrugated transverse watertight bulkheads are fitted, the scantlings are to be determined in accordance with the following requirements.

10.4.2 For ships of length, *L*, 190 m or above, the vertically corrugated transverse bulkheads are to be fitted with a bottom stool and, generally, with a top stool below the deck. The requirements of 10.6 are to be complied with as appropriate.

10.4.3 The loads to be considered as acting on the bulkheads are those given by the combination of cargo loads with those induced by the flooding of one hold adjacent to the bulkhead under consideration. The most severe combinations of cargo induced loads and flooding loads are to be used for the determination of the scantlings of each bulkhead, depending on the specified design loading conditions:

(a) homogeneous loading conditions,
(b) non-homogeneous loading conditions (excluding part loading conditions associated with multi-port loading and unloading),
(c) packed cargo conditions (such as steel mill products).

The individual flooding of loaded and empty holds is to be considered, but the pressure used in the assessment is not to be less than that obtained for flood water alone. Holds containing packed cargo are to be treated as empty holds.

10.4.4 The cargo surface is to be taken as horizontal and at a distance d_1, in metres, from the base line, *see* Fig. 7.10.1, where d_1 is calculated taking into account the cargo properties and the hold dimensions. Unless the ship is designed to carry only cargo of bulk density greater than or equal to 1,78 tonne/m^3 in non-homogeneous loading conditions, the maximum mass of cargo which may be carried in the hold is to be taken as filling that hold to the upper deck level at centreline. A permeability, μ, of 0,3 and angle of repose, ψ, of 35° is to be assumed for this application.

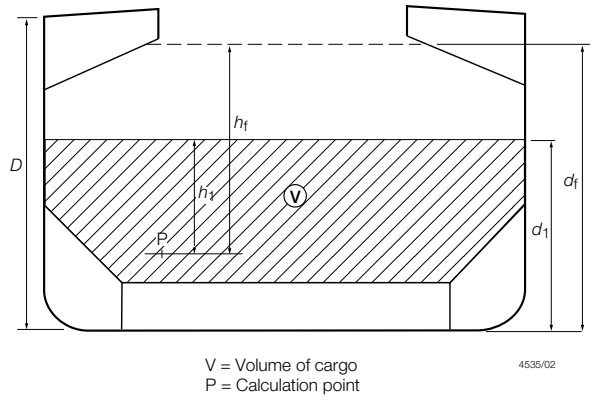

Fig. 7.10.1 Cargo hold dimensions

10.4.5 An homogeneous load condition is defined as one where the ratio between the highest and the lowest filling levels, d_1, in adjacent holds does not exceed 1,20. For this purpose, where a loading condition includes cargoes of different densities, equivalent filling levels are to be calculated for all holds on the basis of a single reference value of cargo density, which can be the minimum to be carried.

10.4.6 The permeability, μ, may be taken as 0,3 for ore, coal and cement cargoes. The bulk density and angle of repose, ψ, may generally be taken as 3,0 tonne/m^3 and 35° respectively for iron ore and 1,3 tonne/m^3 and 25° respectively for cement.

10.4.7 The flooding head, h_f, *see* Fig. 7.10.1, is the distance, in metres, measured vertically with the ship in the upright position, from the location *P*, under consideration, to a position d_f, in metres, from the base line as given in Table 7.10.1.

10.4.8 In considering a flooded hold, the total load is to be taken as that of the cargo and flood water at the appropriate permeability. Where there is empty volume above the top of the cargo, this is to be taken as flooded to the level of the flooding head.

10.4.9 Corrugations may be constructed of flanged plates or fabricated from separate flange and web plates, which may be of different thicknesses. The corrugation angle is to be not less than 55°, *see* Fig. 7.10.2.

10.4.10 The term net plate thickness is used to describe the calculated minimum thickness of plating of the web, t_w, or flange, t_f. The plate thickness to be fitted is the net plate thickness plus a corrosion addition of 3,5 mm.

10.5 Vertically corrugated transverse watertight bulkheads – scantling assessment

10.5.1 The bending moment *M*, in kNm (tonne-f m), for the bulkhead corrugations is given by:

$$M = \frac{F\,l}{8}$$

where

l = span of the corrugation, in metres, to be measured between the internal ends of the bulkhead upper and lower stools in way of the neutral axis of the corrugations or, where no stools are fitted, from inner bottom to deck, *see* Fig. 7.10.2 and Fig. 7.10.3. The lower end of the upper stool is not to be taken greater than a distance from the deck at the centreline equal to:
3 times the depth of the corrugation, in general, or
2 times the depth of the corrugation, for rectangular stools

F = resultant force, in kN (tonne-f), *see* Table 7.10.3.

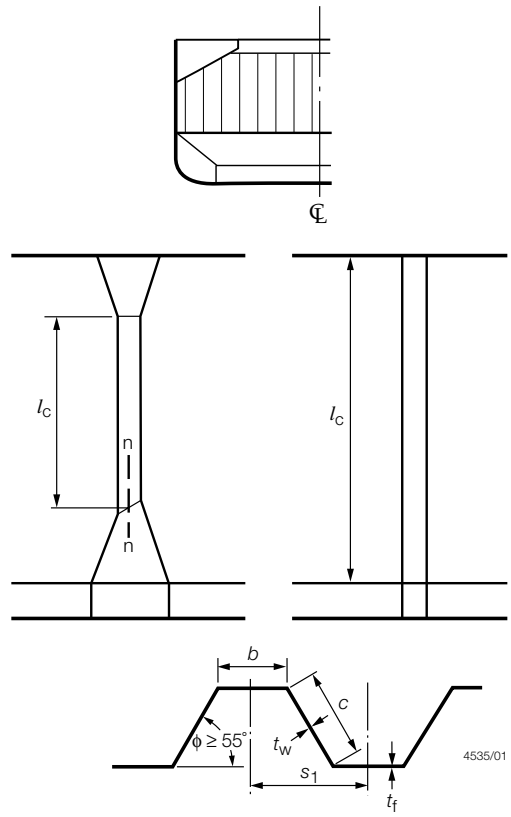

n = neutral axis of the corrugations
s = max (*b*; *c*)

Fig. 7.10.2
Dimensions of bulkhead corrugation angles

10.5.2 The shear force, *Q*, in kN (tonne-f) at the lower end of the bulkhead corrugation is given by:

$$Q = 0{,}8F$$

where

F is defined in 10.5.1.

Table 7.10.1 Flooding head

Item	Bulkhead location	Bulk carriers with Type B freeboard and deadweight < 50 000 tonnes	Other bulk carriers
I(1)	Between holds 1 and 2	$d_f = 0{,}95D$	$d_f = D$
	Elsewhere	$d_f = 0{,}85D$	$d_f = 0{,}9D$
II(1)	Between holds 1 and 2	$d_f = 0{,}9D$	$d_f = 0{,}95D$
	Elsewhere	$d_f = 0{,}8D$	$d_f = 0{,}85D$

NOTES
1. Item II is to be used for non-homogeneous loading conditions where the bulk cargo density is less than 1,78 tonne/m^3. Otherwise, Item I is to be used.
2. *D* = distance, in metres, from the base line to the freeboard deck at side amidships, *see* Fig. 7.10.1.

Table 7.10.2 Bulkhead pressure and force

Item	Pressure, kN/m^2 (tonne-f/m^2)	Force, kN (tonne-f)
(1) In non-flooded bulk cargo holds	$p_c = g\,\rho_c\,h_1\tan^2\theta$ $(p_c = \rho_c\,h_1\tan^2\theta)$	$F_c = 0{,}5\,\rho_c\,g\,s_1\,(d_1 - h_{DB} - h_{LS})^2\tan^2\theta$ $(F_c = 0{,}5\,\rho_c\,s_1\,(d_1 - h_{DB} - h_{LS})^2\tan^2\theta)$
(2) In flooded bulk cargo holds, when $d_f \geq d_1$ (a) For positions between d_1 and d_f from base line (b) For positions at a distance lower than d_1 from base line	$p_{cf} = g\,\rho\,h_f$ $(p_{cf} = \rho\,h_f)$ $p_{cf} = g\,(\rho\,h_f + (\rho_c - \rho\,(1-\mu))\,h_1\tan^2\theta$ $(p_{cf} = (\rho\,h_f + (\rho_c - \rho\,(1-\mu))\,h_1\tan^2\theta)$	$F_{cf} = 0{,}5\,s_1\,(\rho\,g\,(d_f - d_1)^2 + (\rho\,g\,(d_f - d_1) + p_{le})\,(d_1 - h_{DB} - h_{LS}))$ $(F_{cf} = 0{,}5\,s_1\,(\rho\,(d_f - d_1)^2 + (\rho\,(d_f - d_1) + p_{le})\,(d_1 - h_{DB} - h_{LS})))$
(3) In flooded bulk cargo holds, when $d_f < d_1$ (a) For positions between d_1 and d_f from base line (b) For positions at a distance lower than d_f from base line	$p_{cf} = g\,\rho_c\,h_1\tan^2\theta$ $(p_{cf} = \rho_c\,h_1\tan^2\theta)$ $p_{cf} = g\,(\rho\,h_f + (\rho_c\,h_1 - \rho\,(1-\mu)\,h_f)\tan^2\theta)$ $(p_{cf} = (\rho\,h_f + (\rho_c\,h_1 - \rho\,(1-\mu)\,h_f)\tan^2\theta))$	$F_{cf} = 0{,}5\,s_1\,(\rho_c\,g\,(d_1 - d_f)^2\tan^2\theta + (\rho_c\,g\,(d_1 - d_f)\tan^2\theta + p_{le})\,(d_f - h_{DB} - h_{LS}))$ $(F_{cf} = 0{,}5\,s_1\,(\rho_c\,(d_1 - d_f)^2\tan^2\theta + (\rho_c\,(d_1 - d_f)\tan^2\theta + p_{le})(d_f - h_{DB} - h_{LS})))$
(4) In flooded empty holds	$p_f = g\,\rho\,h_f$ $(p_f = \rho\,h_f)$	$F_f = 0{,}5\,s_1\,\rho\,g\,(d_f - h_{DB} - h_{LS})^2$ $(F_f = 0{,}5\,s_1\,\rho\,(d_f - h_{DB} - h_{LS})^2)$

Symbols

d_f *see* 10.4.7
d_1 = vertical distance, in metres, from the base line to the top of the cargo, *see* Fig. 7.10.1
g = gravitational constant, 9,81 m/sec^2
h_{DB} = height of double bottom, in metres
h_f = flooding head, *see* 10.4.7
h_{LS} = mean height of lower stool, in metres
h_1 = vertical distance, in metres, from the calculation point to the top of the cargo, *see* Fig. 7.10.1
p_c, p_{cf}, p_f = pressure on the bulkhead at the point under consideration, in kN/m^2 (tonne-f/m^2)
p_{le} = pressure at the lower end of the corrugation, in kN/m^2 (tonne-f/m^2)
s_1 = spacing of the corrugations, in metres, *see* Fig. 7.10.2
ρ = density of sea water = 1,025 tonne/m^3
ρ_c = bulk cargo density, in tonne/m^3
θ = 45° – (Ψ/2)
ψ = angle of repose of the cargo, in degrees
μ = permeability of cargo, *see* 10.4.6

Table 7.10.3 Resultant pressure and force

Loading condition	Resultant pressure kN/m^2 (tonne-f/m^2)	Resultant force kN (tonne-f)
Homogeneous	$p_r = p_{cf} - 0{,}8p_c$	$F = F_{cf} - 0{,}8F_c$
Non-homogeneous	$p_r = p_{cf}$	$F = F_{cf}$
Flood water alone (adjacent holds empty)	$p_r = p_f$	$F = F_f$
NOTE For symbols, *see* Table 7.10.2.		

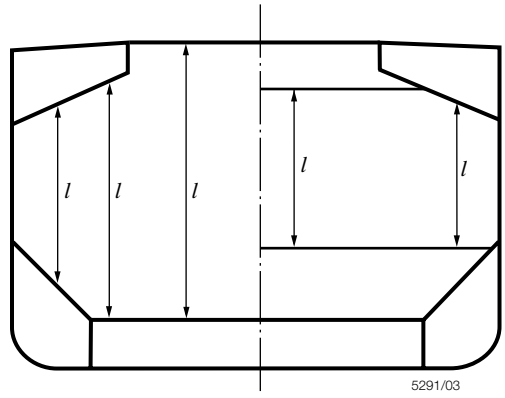

Fig. 7.10.3 Scantling assessment

10.5.3 The section modulus of the corrugations is to be calculated using net plate thicknesses. At the lower end, the following requirements apply:

(a) An effective width of compression flange, b_{ef}, not greater than given in 10.5.7, is to be used.

(b) Where corrugation webs are not supported by local brackets below the shelf plate (or below the inner bottom if no lower stool is fitted), they are to be assumed 30 per cent effective in bending. Otherwise, the full area of web plates may be used, *see also* (e).

(c) Where effective shedder plates are fitted, *see* Figs. 7.10.4(a) and 7.10.4(b), the net area of the corrugation flange plates, in cm^2, may be increased by the lesser of:

$$2{,}5b\sqrt{(t_f\,t_{sh})} \quad \text{and } 2{,}5b\,t_f$$

where

b = width of corrugation flange, in metres, *see* Fig. 7.10.2

t_f = net flange plate thickness, in mm

t_{sh} = net shedder plate thickness, in mm

A shedder plate is considered effective when it:

- is not knuckled; and
- is welded to the corrugations and the lower stool shelf plate by one-side penetration welds or equivalent; and
- has a minimum slope of 45° and lower edges in line with the stool side plating; and
- has a thickness not less than 0,75 times the thickness of the corrugation flanges; and
- has material properties at least equal to those of the corrugation flanges.

(d) Where effective gusset plates are fitted, see Figs. 7.10.5(a) and (b) the net area of the corrugation flange plates, in cm^2, may be increased by:

$7h_g\, t_f$

where

h_g = height of the gusset plate, in metres, but is not to be taken greater than $\frac{10}{7}\, s_{gu}$

t_f = net flange plate thickness, in mm

s_{gu} = width of the gusset plate, in metres

A gusset plate is considered effective when it:

- is fitted in combination with an effective shedder plate as defined in (c); and
- has height not less than half the flange plate width; and
- is fitted in line with the stool side plating; and
- has thickness and material properties at least equal to those of the flanges; and
- is welded to the top of the lower stool by full penetration welds and to the corrugations and shedder plates by one-side penetration welds or equivalent.

(e) Where the corrugation is welded to a sloping stool shelf plate, set at an angle of not less than 45° to the horizontal, the corrugation webs may be taken as fully effective in bending. Where the slope is less than 45°, the effectiveness is to be assessed by linear interpolation between fully effective at 45° and the appropriate value from (b) at 0°. Where effective gusset plates are also fitted, the area of the flange plates may be increased in accordance with (d). No increase is permitted in the case where shedder plates are fitted without gussets.

10.5.4 The section modulus of corrugations at cross-sections other than the lower end is to be calculated with fully effective webs and an effective compression flange width, b_{ef} not greater than given in 10.5.7.

10.5.5 The bending capacity of the bulkhead corrugations is to comply with the following relationship:

$$\frac{1000\, M}{0{,}5 Z_{le}\, \sigma_{p,le} + Z_m\, \sigma_{p,m}} \leq 0{,}95$$

where

M = bending moment, in kNm (tonne-f m), *see* 10.5.1

Z_{le} = section modulus at the lower end of the corrugations, in cm^3

Z_m = section modulus at mid-span of the corrugations, in cm^3

$\sigma_{p,le}$ = permissible bending stress at the lower end of the corrugations, in N/mm^2 (kgf/mm^2)

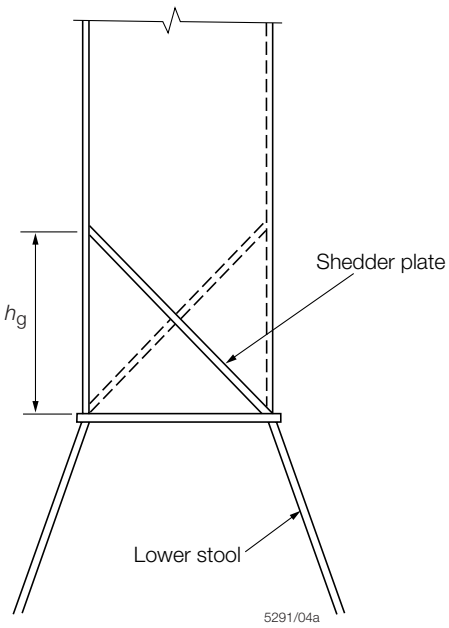

Fig. 7.10.4(a) Symmetric shedder plates

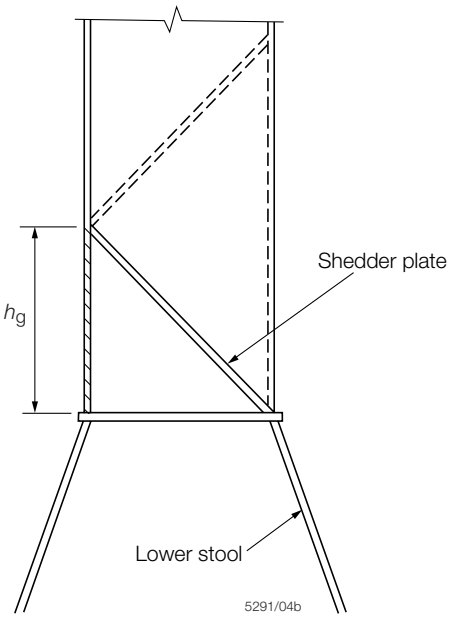

Fig. 7.10.4(b) Asymmetric shedder plates

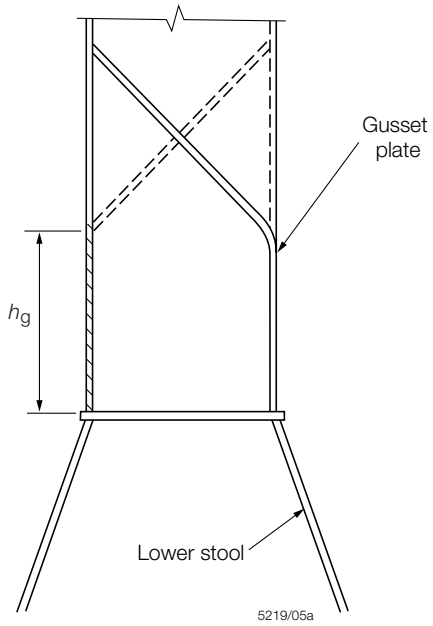

Fig. 7.10.5(a) Symmetric gusset/shedder plates

Table 7.10.4 Permissible shear and buckling stresses

Bending, N/mm^2 (kgf/mm^2)	Shear, N/mm^2 (kgf/mm^2)	Shear buckling, N/mm^2 (kgf/mm^2)
$\sigma_p = \sigma_0$	$\tau_p = 0{,}5\sigma_0$	$\tau_{cr} = \tau_E$ when $\tau_E \le \frac{\tau_0}{2}$ $= \tau_0\left(1 - \frac{\tau_0}{4\tau_E}\right)$ when $\tau_E \le \frac{\tau_0}{2}$
Symbols		

b = width of corrugation flange, in metres, *see* Fig. 7.10.2
c = width of corrugation web, in metres, *see* Fig. 7.10.2
t_f = net flange plate thickness, in mm
t_w = web plate net thickness, in mm
E = modulus of elasticity
= 206 000 N/mm^2 (21000 kgf/mm^2)
σ_0 = specified minimum yield stress, in N/mm^2 (kgf/mm^2)
τ_E = $5{,}706\, E\, (t_w/1000c)^2$ N/mm^2 (kgf/mm^2)
τ_0 = $\frac{\sigma_0}{\sqrt{3}}$ N/mm^2 (kgf/mm^2)

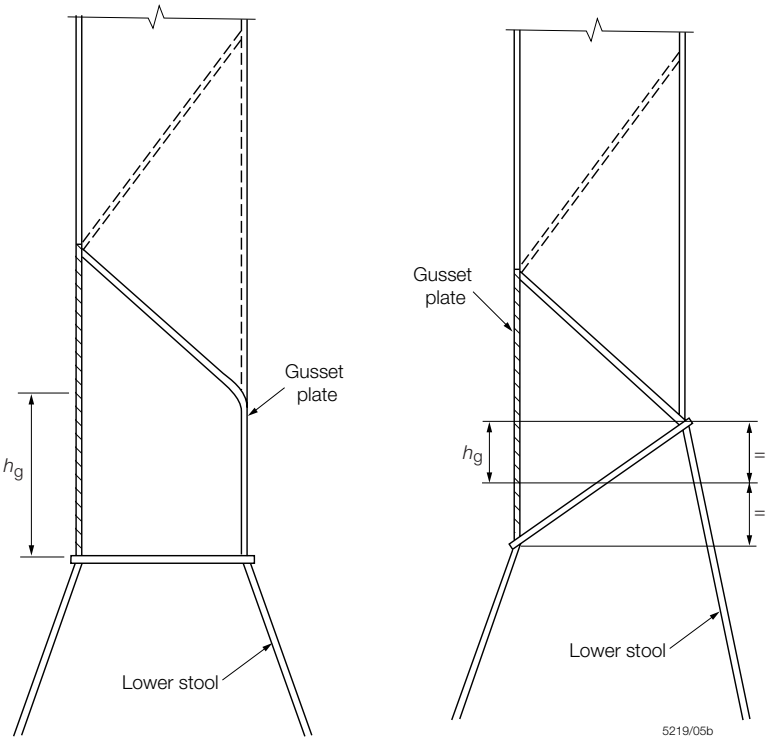

Fig. 7.10.5(b) Asymmetric gusset/shedder plates

$\sigma_{p,m}$ = permissible bending stress at mid-span of the corrugations, in N/mm^2 (kgf/mm^2)

In the above expression Z_{le}, in cm^3, is not to be taken greater than Z'_{le}

where

$$Z'_{le} = Z_g + \left(\frac{1000\, Q\, h_g - 0{,}5 h_g^2\, s_1\, p_g}{\sigma_{p,le}} \right)$$

and Z_m is not to exceed the lesser of $1{,}15 Z_{le}$ and $1{,}15 Z'_{le}$

where

h_g = height of the gusset plate, in metres

p_g = resultant pressure calculated in way of the middle of the shedder or gusset plates as appropriate, in kN/m^2 (tonne-f/m^2)

s_1 = spacing of the corrugations, in metres

Q = shear force, in kN (tonne-f), *see* 10.5.2

Z_g = section modulus of the corrugations in way of the upper end of shedder or gusset plates as appropriate, in cm^3.

10.5.6 The applied shear stress, in N/mm^2 (kgf/mm^2), is determined by dividing the shear force derived from 10.5.2 by the shear area of the corrugation, calculated using the net plate thickness. The shear area is to be reduced to account for non-perpendicularity between the corrugation webs and flanges. In general, the reduced area may be obtained by multiplying the web sectional area by sin ϕ, where ϕ is the angle between the web and the flange, *see* Fig. 7.10.2. The applied shear stress is not to exceed the permissible shear stress or the shear buckling stress given in Table 7.10.4.

10.5.7 The width of the compression flange, in metres, to be used for calculating the effective modulus is:

$b_{ef} = C_{ef}\, b$

where

$$C_{ef} = \frac{2{,}25}{\beta} - \frac{1{,}25}{\beta^2} \quad \text{for } \beta > 1{,}25$$

$$C_{ef} = 1{,}0 \quad \text{for } \beta \le 1{,}25$$

$$\beta = 10^3 \left(\frac{b}{t_f} \right) \sqrt{\frac{\sigma_0}{E}}$$

Other symbols are as defined in Table 7.10.4.

10.5.8 The corrugation flange and web local net plate thickness are not to be less than:

$$t = 14{,}9\, s_w \sqrt{1{,}05\, \frac{p_r}{\sigma_0}} \quad \text{mm}$$

where

s_w = plate width, in metres, to be taken equal to the width of the corrugation flange or web, whichever is the greater

p_r = resultant pressure, in kN/m^2 (tonne-f/m^2), as defined in Table 7.10.3, at the lower edge of each strake of plating. The net thickness of the lowest strake is to be determined using the resultant pressure at the top of the lower stool, (or at the inner bottom, if no lower stool is fitted), or at the top of the shedders, if effective shedder or gusset and shedder plates are fitted

σ_0 = specified minimum yield stress of the material, in N/mm^2 (kgf/mm^2).

10.5.9 For built-up corrugations, where the thickness of the flange and of the web are different, the net thickness of the narrower plating is to be not less than:

$$t_n = 14{,}9\, s_n \sqrt{1{,}05\, \frac{p_r}{\sigma_0}} \quad \text{mm}$$

where

s_n = width of the narrower plating, in metres.

The net thickness, in mm, of the wider plating is not to be taken less than the greater of:

$$t_{wp} = 14{,}9\, s_w \sqrt{1{,}05\, \frac{p_r}{\sigma_0}} \quad \text{mm or}$$

$$t_{wp} = \sqrt{\frac{462\, s_w^2\, p_r}{\sigma_0} - t_{np}^2} \quad \text{mm}$$

where

t_{np} ≤ actual net thickness of the narrower plating but not greater than:

$$14{,}9\, s_w \sqrt{1{,}05\, \frac{p_r}{\sigma_0}} \quad \text{mm}$$

10.5.10 The required thickness of plating is the net thickness plus the corrosion addition given in 10.4.10.

10.5.11 Scantlings required to meet the bending and shear strength requirements at the lower end of the bulkhead corrugation are to be maintained for a distance of 0,15l from the lower end, where l is as defined in 10.5.1. Scantlings required to meet the bending requirements at mid-height are to be maintained to a location no greater than 0,3l from the top of the corrugation. The section modulus of the remaining upper part of the corrugation is to be not less than 0,75 times that required for the middle part, corrected for differences in yield stress.

10.6 Vertically corrugated transverse bulkheads – support structure at ends

10.6.1 The requirements of 10.2 are to be complied with as applicable, together with the following.

10.6.2 **Lower stool**:

(a) The height of the lower stool is generally to be not less than three times the depth of the corrugations.

(b) The thickness and steel grade of the stool shelf plate are to be not less than those required for the bulkhead plating above.

(c) The thickness and steel grade of the upper portion of vertical or sloping stool side plating, within the depth equal to the corrugation flange width from the stool top, are to be not less than the flange plate thickness and steel grade needed to meet the bulkhead requirements at the lower end of the corrugation.

(d) The thickness of the stool side plating and the section modulus of the stool side stiffeners are to be not less than those required by Ch 1,9 for a plane transverse bulkhead and stiffeners using the greater of the pressures determined from the head, h_4, in Table 1.9.1 and the expressions given in Table 7.10.2.

(e) The ends of stool side vertical stiffeners are to be attached to brackets at the upper and lower ends of the stool.

(f) The width of the shelf plate is to be in accordance with Fig. 7.10.6.

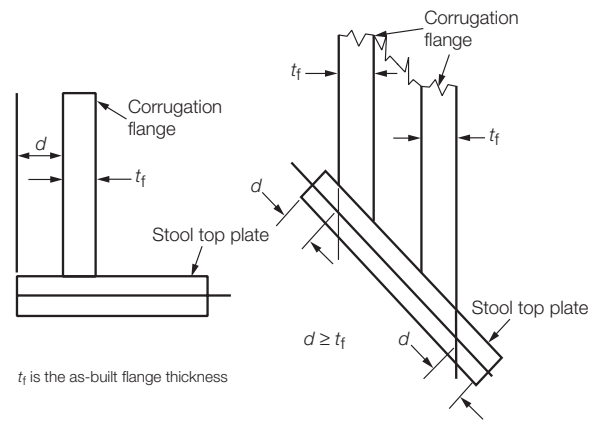

Fig. 7.10.6 Width of shelf plate

(g) The stool bottom is to have a width not less than 2,5 times the mean depth of the corrugation.

(h) Scallops in the brackets and diaphragms in way of connections to the stool shelf plate are to be avoided.

(j) Where corrugations are terminated on the bottom stool, corrugations are to be connected to the stool top plate by full penetration welds. The stool side plating is to be connected to the stool top plate and the inner bottom plating by either full penetration or deep penetration welds, *see* Fig. 7.10.7. The supporting floors are to be connected to the inner bottom by either full penetration or deep penetration welds.

10.6.3 **Upper stool**:

(a) The upper stool, where fitted, is to have a height generally between two and three times the depth of corrugations.

(b) Rectangular stools are to have a height generally equal to twice the depth of corrugations, measured from the deck level and at hatch side girder.

(c) The upper stool is to be properly supported by girders or deep brackets between the adjacent hatch-end beams.

(d) The width of the shelf plate is generally to be the same as that of the lower stool shelf plate.

(e) The upper end of a non-rectangular stool is to have a width not less than twice the depth of corrugations.

(f) The thickness and steel grade of the shelf plate are to be the same as those of the bulkhead plating below.

(g) The thickness of the lower portion of stool side plating is to be not less than 80 per cent of that required for the upper part of the bulkhead plating where the same materials is used.

(h) The thickness of the stool side plating and the section modulus of the stool side stiffeners are to be not less than those required by Ch 1,9 for plane transverse bulkheads and stiffeners using the greater of the pressures determined from the head, h_4, in Table 1.9.1 and the expressions given in Table 7.10.2.

(j) Where vertical stiffening is fitted, the ends of stool side stiffeners are to be attached to brackets at the upper and lower end of the stool.

(k) Diaphragms are to be fitted inside the stool, in line with, and effectively attached to, longitudinal deck girders extending to the hatch end coaming girders for effective support of the corrugated bulkhead.

(l) Scallops in the brackets and diaphragms in way of the connection to the stool shelf plate are to be avoided.

10.6.4 If no upper stool is fitted, two transverse reinforced beams are to be fitted in line with the corrugation flanges.

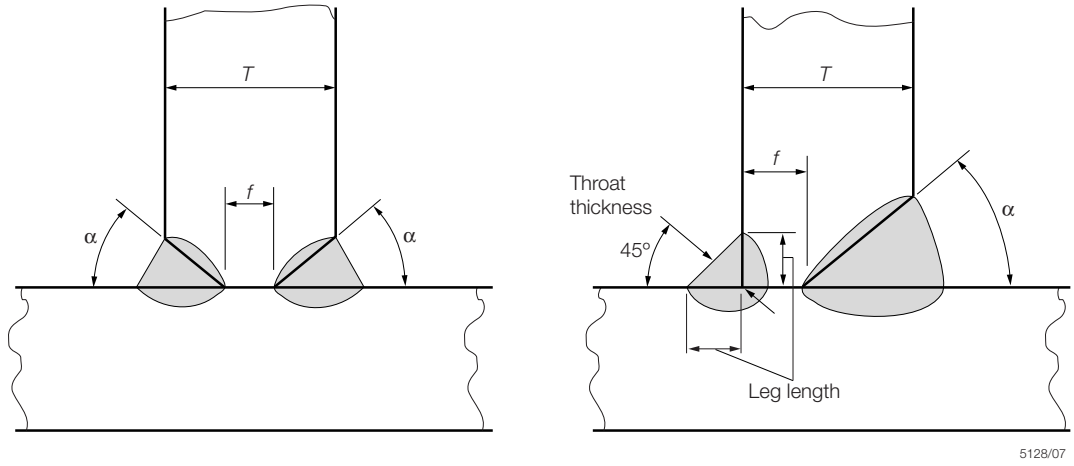

Root face f = 3 mm to T/3 mm

Groove angle α = 40 to 60

Throat thickness =
Leg length = } *See* Pt 3, Ch 10 of the Rules for Ships

Fig. 7.10.7 Welding

10.6.5 If no bottom stool is fitted, the corrugation flanges are to be in line with the supporting floors. Corrugations are to be connected to the inner bottom plating by full penetration welds. The thickness and steel grades of the supporting floors are to be at least equal to those provided for the corrugation flanges. The plating of supporting floors is to be connected to the inner bottom by either full penetration or deep penetration welds, *see* Fig. 7.10.7. The cut-outs for connections of the inner bottom longitudinals to double bottom floors are to be closed by collar plates. The supporting floors are to be connected to each other by suitably designed shear plates. Stool side plating is to align with the corrugation flanges. Stool side vertical stiffeners and their brackets in the lower stool are to align with the inner bottom longitudinals to provide appropriate load transmission between these stiffening members. The lower stool side plating is not to be knuckled.

10.6.6 Stool side plating is to align with the corrugation flanges. Stool side vertical stiffeners and their brackets in the lower stool are to align with the inner bottom longitudinals to provide appropriate load transmission between these stiffening members. The lower stool side plating is not to be knuckled.

10.6.7 The design of local details is to take into account the transfer of the bulkhead forces and moments to the boundary structures and particularly to the double bottom and cross-deck structures.

■ *Section 11* Direct calculation

11.1 Application

11.1.1 Direct calculations are to be employed in derivation of scantlings where required by the preceding Sections of this Chapter or by related provisions included in Part 3.

11.1.2 Direct calculation methods are also generally to be used where additional calculations are required by the Rules in respect of unusual structural arrangements.

11.2 Procedures

11.2.1 For details of LR's direct calculation procedures, *see* Pt 3, Ch 1,2. For requirements concerning use of other calculation procedures, *see* Pt 3, Ch 1,3.

■ *Section 12* Steel hatch covers

12.1 General

12.1.1 These requirements apply to hatch covers on exposed decks in Position 1, *see* Pt 3, Ch 1,6.5.1, and are in addition to the requirements of Pt 3, Ch 11,2.

12.1.2 The net plate thickness, t_{net}, is the calculated minimum thickness of the plating and stiffeners. The required thickness is the net thickness plus a corrosion addition, t_c, given in Table 7.12.1.

Table 7.12.1 Corrosion addition t_c

Hatch cover type	t_c, in mm
(a) Single skin	2,0
(b) Pontoon (double skin)	
(i) for the top and bottom plating	2,0
(ii) for the internal structures	1,5

12.1.3 Material for the hatch covers is to be steel according to the requirements for ship's hull.

12.2 Stiffener arrangement

12.2.1 The secondary stiffeners and primary supporting members of the hatch covers are to be continuous over the breadth and length of the hatch covers, as far as practical. When this is impractical, sniped end connections are not to be used and appropriate arrangements are to be adopted to ensure sufficient load carrying capacity.

12.2.2 The spacing of primary supporting members parallel to the direction of secondary stiffeners is not to exceed 1/3 of the span of primary supporting members.

12.3 Closing arrangements

12.3.1 Panel hatch covers are to be secured by appropriate devices (bolts, wedges or similar) suitably spaced alongside the coamings and between cover elements.

12.3.2 Arrangement and spacing are to be determined with due attention to the effectiveness for weather-tightness, depending upon the type and the size of the hatch cover, as well as on the stiffness of the cover edges between the securing devices.

12.3.3 The net sectional area of each securing device is not to be less than:

$$A = 1{,}4\, a/f \quad \text{cm}^2$$

where

a = spacing in m of securing devices, not being taken less than 2 m

f = $(\sigma_Y/235)^e$

σ_Y = specified minimum upper yield stress in N/mm^2 of the steel used for fabrication, not to be taken greater than 70 per cent of the ultimate tensile strength

e = 0,75 for $\sigma_Y > 235$

= 1,0 for $\sigma_Y \leq 235$

12.3.4 Rods or bolts are to have a net diameter not less than 19 mm for hatchways exceeding 5 m^2 in area.

12.3.5 Between cover and coaming and at cross-joints, a packing line force sufficient to obtain weathertightness is to be maintained by the securing devices. For packing line forces exceeding 5 N/mm, the cross section area is to be increased in direct proportion. The packing line force is to be specified.

12.3.6 The cover edge stiffness is to be sufficient to maintain adequate sealing pressure between securing devices. The moment of inertia, I, of edge elements is not to be less than:

$$I = 6p\,a^4 \text{ cm}^4$$

where

p = packing line pressure in N/mm, minimum 5 N/mm

a = spacing in m of securing devices

12.3.7 Securing devices are to be of reliable construction and securely attached to the hatchway coamings, decks or covers. Individual securing devices on each cover are to have approximately the same stiffness characteristics.

12.3.8 Where rod cleats are fitted, resilient washers or cushions are to be incorporated.

12.3.9 Where hydraulic cleating is adopted, a positive means is to be provided to ensure that it remains mechanically locked in the closed position in the event of failure of the hydraulic system.

12.3.10 Hatch covers are to be effectively secured, by means of stoppers, against transverse and longitudinal forces arising from a pressure of 175 kN/m^2.

12.3.11 The equivalent stress:

- in stoppers and their supporting structures; and
- calculated in the throat of the stopper welds;

is not to exceed the allowable value of $0{,}8\sigma_Y$.

12.4 Load model

12.4.1 The pressure, p, in kN/m^2, acting on the hatch covers is given by:

- For ships of length 100 m or greater, for hatchways located on the freeboard deck, p is to be the greater of 34,3 or the following:

$$p = 34{,}3 + \frac{p_{FP} - 34{,}3}{0{,}25}\left(0{,}25 - \frac{x}{L}\right)$$

  Where a hatchway is located in position 1 and at least one superstructure standard height higher than the freeboard deck, the pressure p may be 34,3 kN/m^2.
- For ships less than 100 m in length, for hatchways located at the freeboard deck, p is to be the greater of $0{,}195L + 14{,}9$ or the following:

$$p = 15{,}8 + \frac{L}{3}\left(1 - \frac{5}{3}\,\frac{x}{L}\right) - 3{,}6\,\frac{x}{L}$$

  Where two or more panels are connected by hinges, each individual panel is to be considered separately.

where

p_{FP} = pressure at the forward perpendicular

= $49{,}1 + (L - 100)\,a$

a = 0,0726 for type B freeboard ships

0,356 for ships with reduced freeboard

L = Freeboard length, in metres, as defined in Regulation 3 of Annex I to the 1966 Load Line Convention as modified by the Protocol of 1988, to be taken not greater than 340 m

x = distance, in metres, of the mid length of the hatch cover under examination from the forward end of L.

12.5 Allowable stress

12.5.1 The normal and shear stresses calculated for the net section hatch cover structures are not to exceed the values given in Table 7.12.2.

Table 7.12.2 Permissible stresses

Failure mode	Permissible stress, in N/mm^2 (kgf/mm^2)
Bending	$\sigma_a = 0{,}80\sigma_F$
Shear	$\tau_a = 0{,}45\sigma_F$
Symbols	
σ_F = minimum upper yield stress, in N/mm^2 (kgf/mm^2)	

12.5.2 The normal stress in compression of the attached flange of primary supporting members is not to exceed 0,8 times the critical buckling stress of the structure according to the buckling check as given in 12.10, 12.11 and 12.12.

12.5.3 The stresses in hatch covers that are designed as a grillage of longitudinal and transverse primary supporting members are to be determined by a grillage or a FE analysis. When such an analysis is used the secondary stiffeners are not to be included in the attached flange area of the primary members.

12.5.4 When calculating the stresses σ and τ as defined in Table 7.12.2, the net scantlings are to be used.

12.6 Effective cross-sectional area of panel flanges for primary supporting members

12.6.1 The effective flange area, A_f, in cm^2, of the attached plating, to be considered for the yielding and buckling checks of primary supporting members, when calculated by means of a beam or grillage model, is obtained as the sum of the effective flange areas of each side of the girder web as appropriate:

$$A_f = \sum_{nf} (10 b_{ef}\, t)$$

where

nf = 2 if attached plate flange extends on both sides of girder web

= 1 if attached plate flange extends on one side of girder web only

t = net thickness of considered attached plate, in mm

b_{ef} = effective breadth of attached plate flange on each side of girder web, in metres

= b_p, but not to be taken greater than $0{,}165l$

b_p = half distance between the considered primary supporting member and the adjacent one, in metres

l = span of primary supporting members, in metres

12.7 Local net plate thickness

12.7.1 The local net plate thickness of the hatch cover plating is to be not less than:

$$t = F_p\, 15{,}8s \sqrt{\frac{p}{0{,}95\sigma_F}}$$

or 1 per cent of the spacing of the stiffeners or 6 mm, whichever is greater

where

F_p = factor for combined membrane and bending response
= 1,50 in general
= $1{,}90\sigma/\sigma_a$, where $\sigma/\sigma_a \geq 0{,}8$, for the attached plate flange of primary supporting members

s = stiffener spacing, in metres

p = pressure, in kN/m^2, as defined in 12.4

σ = as defined in 12.9

σ_a = as defined in 12.5.

12.8 Net scantlings of secondary stiffeners

12.8.1 The required minimum section modulus, Z, in cm^3, of secondary stiffeners of the hatch cover top plate, based on stiffener net member thickness, is given by:

$$Z = \frac{1000 l^2\, s\, p}{12\sigma_a}$$

where

l = secondary stiffener span, in metres, to be taken as the spacing, in metres, of primary supporting members or the distance between a primary supporting member and the edge support, as applicable. When brackets are fitted at both ends of all secondary stiffener spans, the secondary stiffener span may be reduced by an amount equal to 2/3 of the minimum bracket arm length, but not greater than 10 per cent of the gross span, for each bracket

s = secondary stiffener spacing, in metres

p = pressure, in kN/m^2, as defined in 12.4

σ_a = as defined in 12.5.

12.8.2 The net section modulus of the secondary stiffeners is to be determined based on an attached plate width assumed equal to the stiffener spacing.

12.9 Net scantlings of primary supporting members

12.9.1 The section modulus and web thickness of primary supporting members, based on member net thickness, are to be such that the normal stress σ in both flanges and the shear stress τ, in the web, do not exceed the allowable values σ_a and τ_a, respectively, defined in 12.5.

12.9.2 The breadth of the primary supporting member flange is to be not less than 40 per cent of their depth for laterally unsupported spans greater than 3,0 m. Tripping brackets attached to the flange may be considered as a lateral support for primary supporting members.

12.9.3 The flange outstand is not to exceed 15 times the flange thickness.

12.10 Hatch cover plating

12.10.1 The compressive stress, σ, in N/mm^2, in the hatch cover plate panels, induced by the bending of primary supporting members parallel to the direction of secondary stiffeners, is not to exceed 0,8 times the critical buckling stress σ_{C1}, to be evaluated as defined below:

$\sigma_{C1} = \sigma_{E1}$ when $\sigma_{E1} \leq \sigma_F/2$

$= \sigma_F\,[1 - \sigma_F/(4\sigma_{E1})]$ when $\sigma_{E1} > \sigma_F/2$

where

σ_F = minimum upper yield stress, in N/mm^2, of the material

$$\sigma_{E1} = 3{,}6E\left(\frac{t}{1000s}\right)^2$$

E = modulus of elasticity, in N/mm^2
= 2,06 x 10^5 for steel

t = net thickness, in mm, of plate panel

s = spacing of secondary stiffeners, in metres

12.10.2 The mean compressive stress σ in each of the hatch cover plate panels, induced by the bending of primary supporting members perpendicular to the direction of secondary stiffeners, is not to exceed 0,8 times the critical buckling stress σ_{C2}, to be evaluated as defined below:

$\sigma_{C2} = \sigma_{E2}$ when $\sigma_{E2} \leq \sigma_F/2$

$= \sigma_F\,[1 - \sigma_F/(4\sigma_{E2})]$ when $\sigma_{E2} > \sigma_F/2$

where

σ_F = minimum upper yield stress, in N/mm^2, of the material

$$\sigma_{E2} = 0{,}9m\,E\left(\frac{t}{1000s_s}\right)^2$$

$$m = c\left[1 + \left(\frac{s_s}{l_s}\right)^2\right]^2 \frac{2{,}1}{\psi + 1{,}1}$$

E = modulus of elasticity, in N/mm^2
= 2,06 x 10^5 for steel

t = net thickness of plate panel, in mm

s_s = length of the shorter side of the plate panel, in metres

l_s = length of the longer side of the plate panel, in metres

Ψ = ratio between smallest and largest compressive stress

c = 1,3 when plating is stiffened by primary supporting members
= 1,21 when plating is stiffened by secondary stiffeners of angle or T type
= 1,1 when plating is stiffened by secondary stiffeners of bulb type
= 1,05 when plating is stiffened by flat bar.

12.10.3 The biaxial compressive stress in the hatch cover panels, when calculated by means of FEM shell element model will be specially considered.

12.11 Hatch cover secondary stiffeners

12.11.1 The compressive stress σ, in N/mm^2, in the top flange of secondary stiffeners, induced by the bending of primary supporting members parallel to the direction of secondary stiffeners, is not to exceed 0,8 times the critical buckling stress σ_{CS}, to be evaluated as defined below:

$\sigma_{CS} = \sigma_{ES}$ when $\sigma_{ES} \le \sigma_F/2$

$= \sigma_F\,[1 - \sigma_F/(4\sigma_{ES})]$ when $\sigma_{ES} > \sigma_F/2$

where

σ_F = minimum upper yield stress, in N/mm^2, of the material

σ_{ES} = ideal elastic buckling stress, in N/mm^2, of the secondary stiffener

= minimum between σ_{E3} and σ_{E4}

σ_{E3} = $0{,}001E\,I_a/(A\,l^2)$

E = modulus of elasticity, in N/mm^2

= 2,06 x 10^5 for steel

I_a = moment of inertia of the secondary stiffener, including a top flange equal to the spacing of secondary stiffeners, in cm^4

A = cross-sectional area of the secondary stiffener, including a top flange equal to the spacing of secondary stiffeners, in cm^2

l = span of the secondary stiffener, in metres

$$\sigma_{E4} = \frac{\pi^2 E\,I_w}{10^4\,I_p\,l^2}\left(m^2 + \frac{K}{m^2}\right) + 0{,}385E\,\frac{I_t}{I_p}$$

$$K = \frac{C\,l^4}{\pi^4 E\,I_w}\,10^6 \quad \text{m}$$

m = number of half waves, given in Table 7.12.3

I_w = sectorial moment of inertia (warping constant) of the secondary stiffener about its connection with the plating, in cm^6

$$= \frac{h_w^3\,t_w^3}{36}\,10^{-6} \text{ for flat bar secondary stiffeners}$$

$$= \frac{t_f\,b_f^3\,h_w^2}{12}\,10^{-6} \text{ for 'Tee' secondary stiffeners}$$

$$= \frac{b_f^3\,h_w^2}{12(b_f + h_w)^2}\,[t_f\,(b_f^2 + 2b_f h_w + 4h_w^2) + 3t_w\,b_f\,h_w]\,10^{-6}$$

for angles and bulb secondary stiffeners

I_p = polar moment of inertia of the secondary stiffener about its connection with the plating, in cm^4

$$= \frac{h_w^3\,t_w}{3}\,10^{-4} \text{ for flat bar secondary stiffeners}$$

$$= \left(\frac{h_w^3\,t_w}{3} + h_w^2\,b_f\,t_f\right)10^{-4}$$

for flanged secondary stiffeners

I_t = St.Venant's moment of inertia of the secondary stiffener without top flange, in cm^4

$$= \frac{h_w^3\,t_w}{3}\,10^{-4} \text{ for flat bar secondary stiffeners}$$

$$= \frac{1}{3}\left[h_w\,t_w^3 + b_f\,t_f^3\left(1 - 0{,}63\,\frac{t_f}{b_f}\right)\right]10^{-4}$$

for flanged secondary stiffeners

h_w, t_w = height and net thickness of the secondary stiffener, respectively, in mm

b_f, t_f = width and net thickness of the secondary stiffener bottom flange, respectively, in mm

s = spacing of secondary stiffeners, in metres

C = spring stiffness exerted by the hatch cover top plating

$$= \frac{k_p\,E\,t_p^3}{3s\left[1 + \dfrac{1{,}33k_p\,h_w\,t_p^3}{1000s\,t_w^3}\right]}\,10^{-3}$$

k_p = $1 - \eta_p$ to be taken not less than zero; for flanged secondary stiffeners, k_p need not be taken less than 0,1

$$\eta_p = \frac{\sigma}{\sigma_{E1}}$$

σ = as defined in 12.9

σ_{E1} = as defined in 12.10

t_p = net thickness of the hatch cover plate panel, in mm.

Table 7.12.3 Number of half waves

K	m
$0 < K < 4$	1
$4 < K < 36$	2
$36 < K < 144$	3
$(m-1)^2\,m^2 < K \le m^2\,(m+1)^2$	m

12.11.2 For flat bar secondary stiffeners and buckling stiffeners, the ratio h/t_W is to be not greater than $15k^{0,5}$

where

h, t_W = height and net thickness of the stiffener, respectively

k = $235/\sigma_F$

σ_F = minimum upper yield stress, in N/mm^2, of the material.

12.12 Web panels of hatch cover primary supporting members

12.12.1 This check is to be carried out for the web panels of primary supporting members formed by web stiffeners or by the crossing with other primary supporting members, the face plate (or the bottom cover plate) or the attached top cover plate.

12.12.2 The shear stress τ in the hatch cover primary supporting members web panels is not to exceed 0,8 times the critical buckling stress τ_C, to be evaluated as defined below:

$\tau_C = \tau_E$ when $\tau_E \le \tau_F/2$

$= \tau_F\,[1 - \tau_F/(4\tau_E)]$ when $\tau_E > \tau_F/2$

where

σ_F = minimum upper yield stress of the material, in N/mm^2

$$\tau_F = \frac{\sigma_F}{3}$$

$$\tau_E = 0{,}9k_t\,E\left(\frac{t_{pr,n}}{1000d}\right)^2$$

E = modulus of elasticity, in N/mm^2

= 2,06 x 10^5 for steel

$t_{pr,n}$ = net thickness of primary supporting member, in mm

k_t = $5{,}35 + 4{,}0/(a/d)^2$

a = greater dimension of web panel of primary supporting member, in metres

d = smaller dimension of web panel of primary supporting member, in metres.

12.12.3 For primary supporting members parallel to the direction of secondary stiffeners, the actual dimensions of the panels are to be considered.

12.12.4 For primary supporting members perpendicular to the direction of secondary stiffeners or for hatch covers built without secondary stiffeners, a presumed square panel of dimension d is to be taken for the determination of the stress τ_C. In such a case, the average shear stress τ between the values calculated at the ends of this panel is to be considered.

12.13 Deflection limit and connections between hatch cover panels

12.13.1 Load bearing connections between the hatch cover panels are to be fitted with the purpose of restricting the relative vertical displacements.

12.13.2 The vertical deflection of primary supporting members is to be not more than 0,0056l, where l is the greatest span of primary supporting members.

■ *Section 13* Hatch coamings

13.1 General

13.1.1 The height and construction of forward and side hatch coamings are to comply with the following requirements. All hatch coamings are to comply with the requirements of Pt 3, Ch 11,5.

13.1.2 For the structure of hatch coamings and coaming stays, the corrosion addition t_s is to be 1,5 mm.

13.1.3 Material for the hatch coamings is to be steel according to the requirements for the ship's hull.

13.1.4 The secondary stiffeners of the hatch coamings are to be continuous over the breadth and length of the hatch coamings.

13.2 Load model

13.2.1 The pressure p_{coam}, on hatch coamings is to be taken as 220 kN/m^2.

13.3 Local net plate thickness

13.3.1 The local net plate thickness, t, in mm, of the hatch coaming plating is to be the greater of 9,5 mm or the following:

$$t = 14{,}9s\sqrt{\frac{p_{coam}}{\sigma_{a,coam}}}\,S_{coam}$$

where

s = secondary stiffener spacing, in metres

p_{coam} = pressure, in kN/m^2, as defined in 13.2.1

S_{coam} = safety factor to be taken equal to 1,15

$\sigma_{a,coam}$ = $0{,}95\sigma_F$.

σ_F = minimum upper yield stress, in N/mm^2, of the material.

13.4 Net scantlings of longitudinal and transverse secondary stiffeners

13.4.1 The required section modulus, Z, in cm^3, of the longitudinal or transverse secondary stiffeners of the hatch coamings, based on net member thickness, is given by:

$$Z = \frac{1000S_{coam}\,l^2\,s\,p_{coam}}{m\,c_p\,\sigma_{a,coam}}$$

where

m = 16 in general

= 12 for the end spans of stiffeners sniped at the coaming corners

S_{coam} = safety factor to be taken equal to 1,15

l = span of secondary stiffeners, in metres

s = spacing of secondary stiffeners, in metres

p_{coam} = pressure in kN/m^2 as defined in 13.2.1

c_p = ratio of the plastic section modulus to the elastic section modulus of the secondary stiffeners with an attached plate breadth equal to 40t, where t is the plate net thickness, in mm

= 1,16 in the absence of more precise evaluation

$\sigma_{a,coam}$ = $0{,}95\sigma_F$

σ_F = minimum upper yield stress, in N/mm^2, of the material.

13.5 Net scantlings of coaming stays

13.5.1 The required minimum section modulus, Z, in cm^3, and web thickness, t_w, in mm of coaming stays designed as beams with flange connected to the deck or sniped and fitted with a bracket (*see* Fig. 7.13.1, Type A and B) at their connection with the deck, based on member net thickness, are given by:

$$Z = \frac{1000 H_c^2 \, s \, p_{coam}}{2 \, \sigma_{a,coam}}$$

$$t_w = \frac{1000 H_c \, s \, p_{coam}}{h \, \tau_{a,coam}}$$

where

H_C = stay height, in metres

s = stay spacing, in metres

h = stay depth at the connection with the deck, in mm

p_{coam} = pressure, in kN/m^2, as defined in 13.2.1

$\sigma_{a,coam}$ = $0{,}95\sigma_F$

$\tau_{a,coam}$ = $0{,}5\sigma_F$

σ_F = minimum upper yield stress, in N/mm^2, of the material.

13.5.2 For calculating the section modulus of coaming stays, their face plate area is to be taken into account only when it is welded with full penetration welds to the deck plating and adequate underdeck structure is fitted to support the stresses transmitted by it.

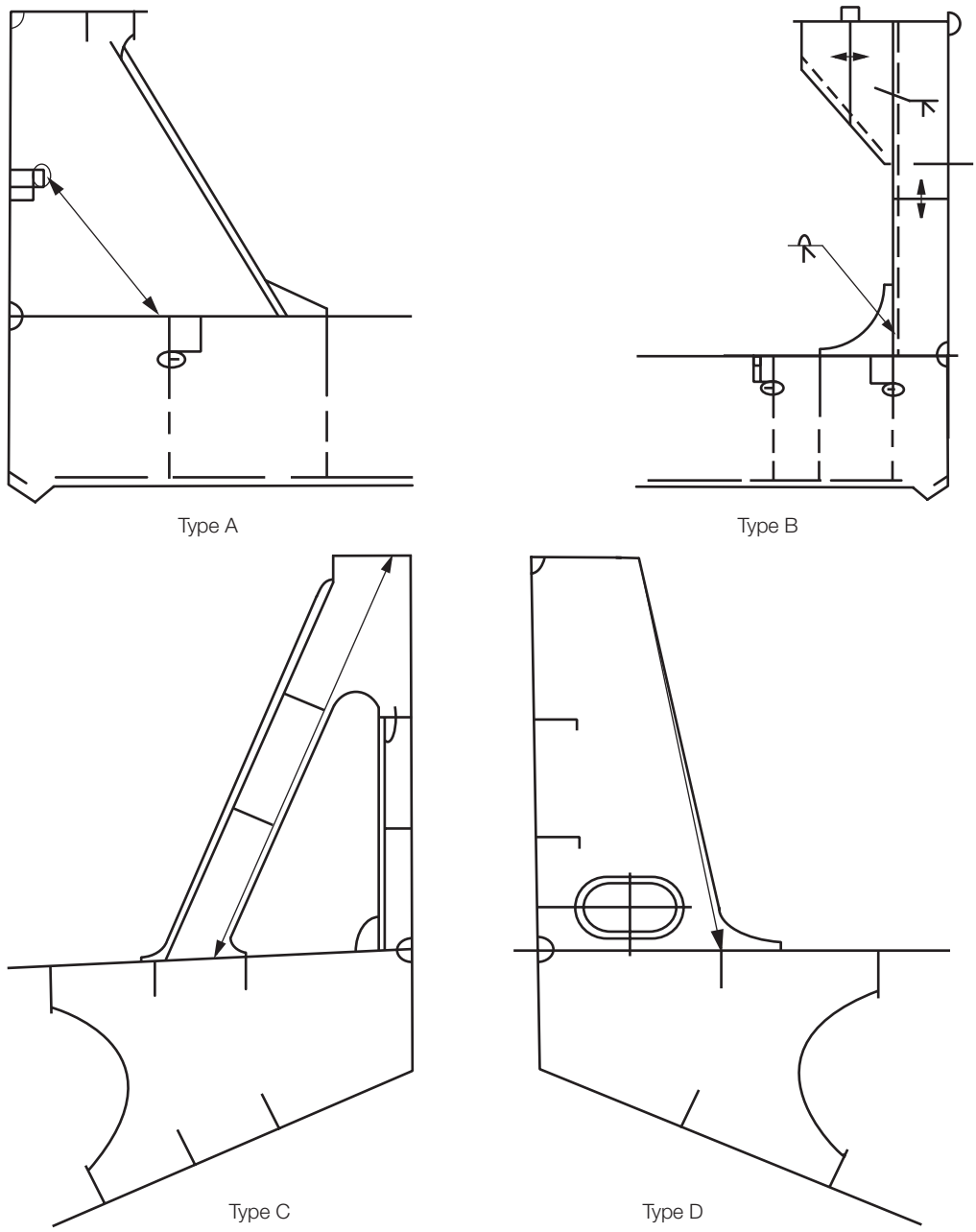

Fig. 7.13.1 Typical coaming stays

13.5.3 For other designs of coaming stays, such as those shown in Fig. 7.13.1 Type C and D, the stress levels in 12.5 apply and are to be checked at the highest stressed locations.

13.6 Local details

13.6.1 The design of local details is to comply with Pt 3, Ch 11,5 for the purpose of transferring the pressures on the hatch covers to the hatch coamings and, through them, to the deck structures below. Hatch coamings and supporting structures are to be adequately stiffened to accommodate the loading from hatch covers, in longitudinal, transverse and vertical directions.

13.6.2 Underdeck structures are to be checked against the load transmitted by the stays, adopting the same allowable stresses specified in 13.5.1.

13.6.3 Double continuous welding is to be adopted for the connections of stay webs with deck plating and the weld throat is to be not less than $0{,}44t_W$, where t_W is the gross thickness of the stay web.

13.6.4 Toes of stay webs are to be connected to the deck plating with deep penetration double bevel welds extending over a distance not less than 15 per cent of the stay width.

■ *Section 14* Forecastles

14.1 Arrangement

14.1.1 An enclosed forecastle is to be fitted on the freeboard deck.

14.1.2 The aft bulkhead of the forecastle is to be fitted in way or aft of the forward bulkhead in the foremost cargo hold. See Fig. 7.14.1. However, if this requirement hinders hatch cover operation, the aft bulkhead of the forecastle may be fitted forward of the forward bulkhead of the foremost cargo hold provided the forecastle length is not less than 7% of ship length abaft the forward perpendicular where the ship length and forward perpendicular are defined in the International Convention on Load Line 1966 and its Protocol 1988.

14.1.3 The forecastle height H_F, in metres, above the main deck is to be not less than the greater of:

- the standard height of a superstructure as specified in the International Convention on Load Lines 1966 and its Protocol of 1988; or
- $H_C + 0{,}5$ m

where

H_C = the height, in metres, of the forward transverse hatch coaming of cargo hold No.1.

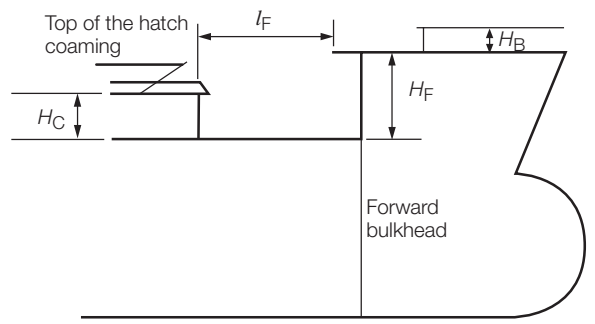

Fig. 7.14.1 Forecastle arrangement

14.1.4 All points of the aft edge of the forecastle deck are to be located at a distance:

$$l_f < 5\sqrt{(H_F - H_C)}$$

from the hatch coaming, *see* Fig. 7.14.1.

14.1.5 A breakwater is not to be fitted on the forecastle deck with the purpose of protecting the hatch coaming or hatch covers. If fitted for other purposes, it is to be located such that its upper edge at centre line is not less than:

$H_B/\tan 20°$

forward of the aft edge of the forecastle deck.

where

H_B = the height, in metres, of the breakwater above the forecastle, *see* Fig. 7.14.1.

14.2 Construction

14.2.1 The construction of the forecastle is to comply with the requirements of Pt 3, Ch 8,4.

Section

1 **General**

2 **Materials**

3 **Longitudinal strength**

4 **Deck structure**

5 **Shell envelope plating**

6 **Shell envelope framing**

7 **Double bottom structure**

8 **Longitudinal bulkheads**

9 **Transverse bulkheads**

10 **Hatch coamings and support for hatch covers**

11 **Hatch covers**

12 **Strengthening for wave impact loads**

13 **Container stowage systems**

14 **Direct calculation**

15 **Requirements for ships with large deck openings**

■ *Section 1* General

1.1 Application and definitions

1.1.1 A **container ship** is defined as a ship designed exclusively for the carriage of containers in holds and on deck. Containers in holds are normally stowed within cellular guide systems.

1.1.2 The term 'Panamax' container ship is as defined in Lloyd's Register's (hereinafter referred to as 'LR') ShipRight SDA Procedures Manual *Primary Structure of Container Ships*.

1.1.3 The term 'narrow side structures' applies where the breadth of hatch opening exceeds 90 per cent of the breadth of the ship.

1.1.4 Other terms used to describe the various structural components of container ships are generally indicated in LR's ShipRight FDA Procedure, *Structural Detail Design Guide*.

1.1.5 For container ships with a beam of Panamax size or greater, or where the structural arrangements are considered such as to necessitate it, the ShipRight notations **SDA** and **CM** are mandatory, *see* 1.3 and Section 14.

1.1.6 Scantlings of the primary structure of double bottom, side and transverse bulkheads are to be verified by direct calculation as required by 14.2.

1.1.7 Scantlings and arrangements are to be as required by Chapter 1, except as otherwise indicated in this Chapter.

1.2 Structural configuration

1.2.1 This Chapter describes a basic structural configuration as shown in Fig. 8.1.1 which includes:

(a) An efficient torsion box girder or equivalent structure at the topsides comprising strength deck, side shell, inner skin and a second deck. The space within the torsion box is often utilised as an underdeck access passageway.
(b) Single or double skin side construction with or without bilge box.
(c) Double bottom.
(d) Continuous or discontinuous hatch coamings.
(e) Optional continuous deck girders to support hatch covers.

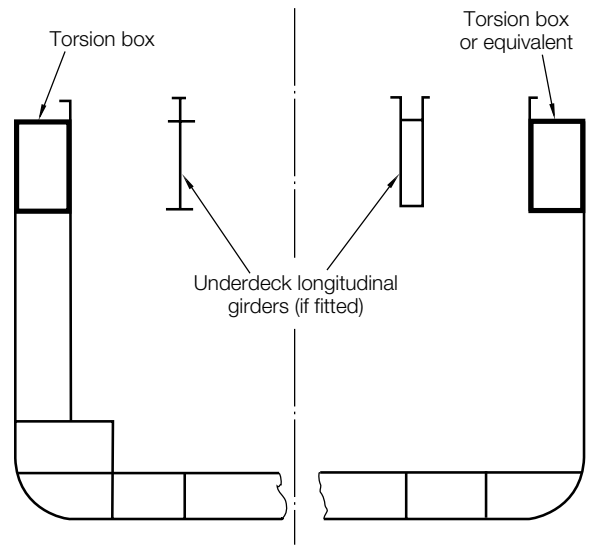

Fig. 8.1.1 Structural configuration

1.3 Class notations

1.3.1 In general, ships complying with the requirements of this Chapter will be eligible to be classed **100A1 Container Ship**.

1.3.2 The 'ShipRight Procedures' for the hull construction of ships are detailed in Pt 3, Ch 16 and the classification notations and descriptive notes associated with these procedures are given in Pt 1, Ch 2,2.

1.3.3 The notations **SDA** and **CM** are mandatory for container ships with any of the following features:
(a) beam of a Panamax size or greater;
(b) narrow side structures;
(c) abnormal hull form; or
(d) unusual structural configuration or complexity.

1.3.4 When required, other cargoes or particular loading arrangements will be included in the class or cargo notations.

1.3.5 Reference is made to Pt 1, Ch 2 with respect to the Regulations for classification and assignment of class notations.

1.4 Information required

1.4.1 In addition to the information and plans required by Pt 3, Ch 1,5, the following are to be submitted:
(a) Details of overlap arrangement of steps in decks and longitudinal bulkheads.
(b) Details of outline stowage arrangement of containers.
(c) Details of design container stack weights.
(d) Details of cell guides and supporting structure indicating the position of guides relative to hatch corners, and attachment to structural members.
(e) Details of reinforcement to structure in way of container corners/supports.
(f) Details of reinforcement to structure in way of lashing bridges where fitted.
(g) Details showing the location of all openings in decks within the cargo holds.
(h) Details of longitudinal girders supporting hatch coamings where fitted.

1.5 Symbols and definitions

1.5.1 The following symbols and definitions are applicable to this Chapter unless otherwise stated:
L, L_{pp}, B, D, T, V, C_b as defined in Pt 3, Ch 1,6
e = base of natural logarithms, 2,7183
k_L, k = higher tensile steel factor, *see* Pt 3, Ch 2,1
s = spacing of secondary stiffeners, in mm
s_1 = spacing of secondary stiffeners, but is not to be taken less than 470 + 1,67L mm
t = thickness of plating, in mm
L_1 = L but need not be taken greater than 190 m

■ *Section 2* Materials

2.1 Materials

2.1.1 Materials are to comply with Pt 3, Ch 2.

2.1.2 Attention is drawn to the specific requirements for container ship hatch corners in Pt 3, Ch 2, Note 1 of Table 2.2.1.

2.2 Protection of steelwork

2.2.1 In addition to the requirements of Pt 3, Ch 2,3 the requirements of Ch 1,2.2.3 may also be applied.

■ *Section 3* Longitudinal strength

3.1 General

3.1.1 Longitudinal strength calculations are to be carried out in accordance with 3.2 and 3.3.

3.1.2 Alternatively the values and distributions of wave induced loads may be derived by direct calculation, *see* Pt 3, Ch 4,2.5.

3.1.3 For ships of abnormal hull form, or for ships of unusual structural configuration or complexity, the values and distributions of wave induced loads are to be agreed with LR.

3.2 Longitudinal strength

3.2.1 Longitudinal strength calculations are to be made in accordance with the requirements of Pt 3, Ch 4 and the additional notes contained in this Section.

3.2.2 The design vertical wave bending moments and design wave shear forces to be used in Pt 3, Ch 4 are to be determined in accordance with Ch 2,2.4 and 2.5.

3.3 Combined longitudinal and torsional strength

3.3.1 The strength of the ship to resist a combination of longitudinal and torsional loads is to be determined in accordance with 14.1.

■ *Section 4* Deck structure

4.1 General

4.1.1 The requirements of Ch 1,4 are to be complied with as modified by this Section.

4.1.2 The strength deck is to be longitudinally framed throughout the region of container holds for ships where $L \geq 100$ m.

4.1.3 Lower decks/side stringers are to be efficiently scarfed into the machinery space, and the fore end and aft end structure.

4.1.4 The ShipRight FDA Procedure, *Structural Detail Design Guide (SDDG)*, indicates recommended examples of structural design configurations in critical areas of deck structures.

4.2 Primary supporting structure

4.2.1 Where decks form part of the primary support structures described in 6.2 and 9.2 the scantlings of the decks are to be verified by direct calculation procedures in accordance with 14.2.

4.3 Deck plating and stiffeners

4.3.1 Strength/weather deck scantlings outside the line of hatch openings are to satisfy the requirements of Section 3 and 4.2, and are to be not less than required by Ch 1,4.2 and Ch 1,4.3.

4.3.2 Within the cargo holds, strength/weather/second deck scantlings inside the line of hatch openings are to satisfy the requirements of Sections 3, 4.2 and 4.4.

4.3.3 Other deck scantlings are to satisfy the requirements of Sections 3, 4.2 and Ch 1,4 as appropriate.

4.4 Cross decks

4.4.1 The width and scantlings of cross-deck strips are to satisfy the requirements of 4.2. The thickness, t, of cross deck strips is to comply with the requirements of Table 8.4.1.

Table 8.4.1 Cross deck plating

Location	Minimum thickness, in mm
At strength deck	The greater of the following: (a) $t = 0{,}012s_1$ (b) $t = 10 + 0{,}01L_1$
At second deck	The greater of the following: (a) $t = 0{,}012s_1$ but need not exceed 12 (b) $t = 8{,}0$
Symbols	
s_1 and L_1 as defined in 1.5.1.	

4.4.2 The thickness may require to be increased locally in way of access openings.

4.4.3 Where the difference between the thickness of plating inside and outside the line of main hatchway openings exceeds 25 mm, a single transition plate is to be fitted at the end of the cross deck strip. The thickness of the transition plate is to be equal to the mean of the adjacent plate thicknesses.

4.4.4 The scantlings of cross-deck stiffeners are to comply with Ch 1,4.

4.4.5 For initial design purposes the width of the cross deck strips, w, forming a transverse bulkhead top box (or equivalent) can be estimated according to the following formula:

$w = 32{,}5B + 400$, or 1000 mm, whichever is the greater

where B is given in 1.5.1.

4.5 Deck openings

4.5.1 The corners of main hatchway openings are generally to be rounded. However, corners with negative radii, or parabolic or elliptic profiles will be specially considered.

4.5.2 The design of hold corners including deck thickness and corner profile is to comply with either 4.5.3 or 4.5.4.

4.5.3 The design of hatch corners is to be verified by direct calculations (*see* 14.1.1).

4.5.4 Alternatively, where the design of hatch corners has not been verified by direct calculations:

(a) The outboard radius of main hatchway openings at strength deck level is, in general, to be not less than 35 per cent of the width of the cross deck strip indicated in 4.4.5 with a minimum of 300 mm.

(b) The radius of the hatch corners of the main hatchway openings adjacent to the engine room is to be made as large as practicable, with a radius of approximately $40B$ mm.

(c) Insert plates at main hatch corners, are to have an increased thickness above the adjacent plating outside the line of hatchways of 15 per cent in way of the container holds, and 25 per cent in container holds at engine room bulkheads. The minimum increase is to be not less than 4,0 mm, nor need exceed 7,0 mm, and the minimum fore and aft extent is to be 1,0 m from the edge of the openings.

4.6 Local reinforcement

4.6.1 Attention is to be paid to structural continuity, and abrupt changes of shape, section or plate thickness are to be avoided, particularly in highly stressed areas. Arrangements in way of openings are to be such as to minimize the creation of stress concentrations.

4.6.2 In general, large access openings are not to be arranged in the strength deck outside the line of main hatchways in the region of container holds.

4.6.3 Small openings, such as those for ventilation pipes or scuppers, are to be kept clear of hold corners, ends of longitudinal hatch coamings, ends of cross deck strips and other critical locations.

4.7 Support for container corner seats

4.7.1 In general, local stiffening is to be fitted under seats for container supports.

4.7.2 The design of attachments to the strength deck is to minimise the effects of stress concentration, and consideration is to be given to the strength and grade of welding consumable used, (*see* Pt 3, Ch 10,2.10.3).

4.7.3 The strength of support arrangements is to be verified in accordance with Pt 3, Ch 14,4.

4.7.4 Doubler plates are not to be utilised in connections subject to tensile loads.

■ *Section 5* Shell envelope plating

5.1 General

5.1.1 The requirements of Ch 1,5 are to be applied, together with the requirements of this Section.

5.1.2 The bottom shell is, in general, to be longitudinally framed for ships where L > = 100 m.

5.1.3 The side shell may be longitudinally or transversely framed, except in way of the topside torsion box which is, in general, to be longitudinally framed.

5.2 Bottom shell and bilge

5.2.1 The thickness of the bottom shell plating is to satisfy the requirements of Section 3 and 7.2 and is to be not less than required by Ch 1,5.3.

5.2.2 In regions where transverse framing is adopted, particularly towards the end of the ship, the buckling stability of the plating will be specially considered.

5.3 Side shell and sheerstrake

5.3.1 The thickness of the side shell and sheerstrake plating is to satisfy the requirements of Section 3 and 6.2 and is to be not less than required by Ch 1,5.4.

5.3.2 At positions where high shear forces are present, local increases in thickness may be required.

5.3.3 The difference in thickness between the sheer-strake and shell plating below is not to exceed 25 mm.

■ *Section 6* Shell envelope framing

6.1 General

6.1.1 The requirements of Ch 1,6 are to be applied, together with the requirements of this Section.

6.1.2 The ShipRight FDA Procedure, *Structural Detail Design Guide (SDDG)* indicates recommended examples of configurations for end connections of shell envelope longitudinals.

6.2 Side shell primary supporting structure

6.2.1 A primary supporting structure for side shell envelope framing is to be provided of either single or double skin construction. This normally consists of a combination of vertical transverse webs and horizontal side stringers/decks.

6.2.2 Transverse webs supporting side shell envelope framing are to be arranged in line with the floors in the double bottom to ensure continuity of transverse strength.

6.2.3 The scantlings of double skin primary structure, including thickness of side shell envelope plating, are to be verified by direct calculations in accordance with 14.2.

6.2.4 The scantlings of single skin primary structure are to comply with Ch 1,6.4. Alternatively the scantlings are to be verified by direct calculations in accordance with 14.2.

6.3 Side stringers in double skin construction

6.3.1 The scantlings of side stringers are to satisfy the requirements of Sections 3, 6.2 and 6.5.

6.3.2 In addition, the scantlings of watertight side stringers are to satisfy the requirements of Ch 1,9.

6.4 Transverse webs in double skin construction

6.4.1 The scantlings of transverse webs are to satisfy the requirements of 6.2 and 6.5.

6.4.2 Transverse webs are to be efficiently stiffened, and the thickness increased locally where necessary on account of high shear stress.

6.4.3 Where, towards the end of the ship, the width of transverse webs reduces from that assumed in the direct calculations, the thickness may require to be increased locally.

6.5 Minimum thickness of transverse webs/side stringers in double skin construction

6.5.1 Transverse webs and side stringers are to have a thickness, t, not less than:

$$t = 7{,}5 + 0{,}015L \text{ or } 9 \text{ mm whichever is the lesser.}$$

■ *Section 7* Double bottom structure

7.1 General

7.1.1 The double bottom is, in general, to be longitudinally framed for ships where $L \geq 100$ m.

7.1.2 Longitudinally framed double bottoms are to comply with Ch 1,8.2 and the contents of this Section.

7.1.3 Transversely framed double bottoms are to comply with Ch 1,8.

7.1.4 The ShipRight FDA Procedure, *Structural Detail Design Guide (SDDG)*, indicates recommended examples of structural design configurations in critical areas of the double bottom.

7.2 Double bottom primary supporting structure

7.2.1 The primary supporting structure formed by the double bottom comprises inner bottom plating, floors, longitudinal girders and bottom shell plating.

7.2.2 The scantlings of this primary structure are to be verified by direct calculations in accordance with 14.2.

7.2.3 Where, towards the end of the ship, the depth of double bottom structure webs is reduced from that assumed in the direct calculations, the thickness may require to be increased locally.

7.2.4 Where mid-hold or quarter-length-of-hold supports for the double bottom structure are arranged, these are to take the form of an efficiently stiffened transverse box or open section structure, *see* 9.4.

7.3 Inner bottom plating and stiffening

7.3.1 The scantlings of the inner bottom are to satisfy the requirements of Section 3 and 7.2 and are to be not less than required by Ch 1,8.4 as modified by this sub-Section.

7.3.2 The requirements of Ch 1,8.4.2 need not be applied to container ships.

7.3.3 In applying Ch 1,8.4.5, the Rule value of bottom longitudinals may be calculated assuming $F_{sb} = 1{,}05$.

7.4 Girders

7.4.1 Girders are, in general, to be arranged under container corner seatings.

7.4.2 The scantlings of watertight centreline/side girders are to satisfy the requirements of Section 3 and 7.2 and are to be not less than required by Ch 1,8.3.

7.4.3 The scantlings of non-watertight centreline/side girders are to satisfy the requirements of Section 3 and 7.2.

7.4.4 For double bottoms having a depth greater than 1,6 m, additional longitudinal stiffening may have to be introduced in order to ensure the buckling stability of the girders.

7.5 Floors

7.5.1 Plate floors are to be fitted under watertight bulkheads, non-watertight bulkheads/mid-hold supports, under container corners at hold quarter length locations and at other locations to ensure that the maximum spacing does not, in general, exceed 3,8 m. Proposals for floor spacings greater than 3,8 m are to be supported by direct calculations agreed with LR.

7.5.2 The scantlings of watertight floors are to satisfy the requirements of 7.2 and are to be not less than required by Ch 1,8.5.

7.5.3 The thickness, t, of non-watertight floors is to satisfy the requirements of 7.2 and is to be not less than:

$t = 6 + 0{,}03L$ or 12 mm, whichever is the lesser.

7.5.4 Non-watertight floor stiffeners are to be fitted at approximately the same spacing as the bottom longitudinals. The scantlings are to satisfy the requirements of Pt 3, Ch 10.

7.5.5 Docking brackets, or equivalent, are to be fitted in accordance with Ch 1,8.5.3.

7.6 Support for containers

7.6.1 In general, local stiffening is to be fitted to double bottom floors or girders under container corner seatings in order to ensure the effective transmission of load.

7.6.2 Such stiffening normally takes the form of additional brackets with suitable extensions to adjacent stiffening members. The scantlings of the adjacent stiffening members may require to be increased depending on the arrangements proposed.

7.6.3 Attention is drawn to the benefit of direct support in order to minimise the effect of eccentric loading on the support brackets.

7.6.4 The scantlings of these arrangements may be determined utilising simple beam models to verify the shear and bending strength. Based on static container loads, the stresses induced in the structure are not to exceed the permissible values stated in Table 8.7.1. Alternative more complex assessment methods are to be agreed with LR.

7.6.5 In general, doubling members or equivalent structures are to be attached to the inner bottom to distribute the load from container corners into the supporting structure. Doubler plates are to have well-rounded corners.

Table 8.7.1 Permissible stress values

	Permissible stress, N/mm^2 (kgf/mm^2)
Normal stress (bending, tension, compression)	$0{,}67\sigma_0$
Shear stress	$0{,}4\sigma_0$
Combined stress	$0{,}86\sigma_0$
Symbols	
σ_o = specified minimum yield stress, in N/mm^2 (kgf/mm^2)	

■ *Section 8* Longitudinal bulkheads

8.1 General

8.1.1 The requirements of Ch 1,9 are to be applied, together with the requirements of this Section.

8.1.2 Longitudinal bulkheads may be transversely or longitudinally framed, except in way of the topside torsion box which is, in general, to be longitudinally framed.

8.1.3 Longitudinal bulkheads are to be maintained continuous in way of the machinery space where this is situated between container holds and as far forward and aft as practicable.

8.1.4 The scarfing arrangements in way of the steps are to be sufficient to ensure an efficient overlap of the inner skin bulkheads.

8.1.5 The ShipRight FDA Procedure, *Structural Detail Design Guide (SDDG)*, indicates recommended examples of structural design configurations in critical areas of the double side skin structures.

8.2 Side shell primary supporting structure

8.2.1 Where the longitudinal bulkhead forms the inner skin of the side shell primary supporting structure the thickness of longitudinal bulkhead plating is to be verified by direct calculations as described in 14.2.

8.3 Plating and stiffeners

8.3.1 The scantlings of longitudinal bulkheads are to satisfy the requirements of Section 3 and 8.2 and are to be not less than required by Ch 1,9.

8.3.2 Openings in the upper parts of longitudinal bulkheads are to have shapes which minimise stress concentrations and are to be framed to ensure adequate buckling stability.

8.3.3 The difference in thickness between the top strake and the bulkhead plating below is not to exceed 25 mm.

8.4 Support for container corner seats

8.4.1 Where direct support for 20 ft containers by the longitudinal bulkhead is required at the mid length of a cell arranged for 40 ft containers, adequate stiffening is to be fitted in order to ensure the effective transmission of load.

8.4.2 The strength of these arrangements is to be verified in accordance with Pt 3 Ch 14,4.

■ *Section 9* Transverse bulkheads

9.1 General

9.1.1 The requirements of Ch 1,9 are to be applied, together with the requirements of this Section.

9.1.2 Watertight transverse bulkheads may be vertically or horizontally framed.

9.1.3 The ShipRight FDA Procedure, *Structural Detail Design Guide (SDDG)*, indicates recommended examples of structural design configurations in critical areas of transverse bulkhead structures.

9.2 Transverse watertight/non-watertight bulkhead primary supporting structure

9.2.1 The primary supporting structure of transverse bulkheads normally comprises a grillage of vertical webs and horizontal stringers/decks.

9.2.2 Vertical webs are to be fitted in line with double bottom girders.

9.2.3 The scantlings of transverse bulkhead primary structure including bulkhead plating are to be verified by direct calculations as described in 14.2.

9.2.4 The scantlings are to be adequate for the static and dynamic loads imposed on the structure by the container stowage arrangements.

9.3 Transverse watertight bulkheads

9.3.1 The thickness of the transverse bulkhead plating is to satisfy the requirements of 9.2 and is to be not less than required by Ch 1,9.2 for watertight bulkheads.

9.3.2 In general, a transverse box structure or equivalent is to be arranged at upper deck level.

9.3.3 In certain cases, a transverse box structure at the inner bottom may also be required.

9.4 Transverse non-watertight mid-hold bulkheads

9.4.1 Where non-watertight bulkheads are arranged in conjunction with the double bottom mid-hold support, a transverse box is to be arranged at strength deck level.

9.4.2 Non-watertight bulkhead scantlings are to satisfy the requirements of 9.2 and Ch 1,4.4 for a non-watertight pillar bulkhead.

■ *Section 10* Hatch coamings and support for hatch covers

10.1 Hatch coamings

10.1.1 Scantlings of hatch coamings are to comply with Pt 3, Ch 11,5 in addition to the requirements of this Section. For ships where the base of the hatch coaming is more than one standard superstructure height (as defined in Pt 3, Ch 8,1.3.2) above the freeboard deck a reduction of the minimum thickness by 1 mm will be permitted.

10.1.2 Continuous side coamings are to be effectively scarfed into the deckhouse structure or gradually tapered at ends, as applicable. The scantlings are also to satisfy the requirements of Section 3.

10.1.3 The scantlings of transverse hatch coamings forming part of a transverse bulkhead top box are also to satisfy the requirements of 9.2.

10.1.4 The ShipRight FDA Procedure, *Structural Detail Design Guide* (SDDG), indicates examples of recommended structural design configurations in critical areas of the hatch side coamings.

10.2 Support for inboard edges of hatch covers by girders

10.2.1 Where longitudinal underdeck girders are fitted at deck level to support the hatch covers the requirements of this sub-Section are to be complied with.

10.2.2 The girders may take the form of open or closed box sections and these should align with webs on the transverse bulkheads to form a continuous ring structure.

10.2.3 The girders are, in general, to be continuous throughout the container hold area, including the engine room where this is situated between container holds.

10.2.4 Special attention is to be given to the intersection of the girders with transverse box girders and the integration into the fore end, aft end and machinery space structures.

10.2.5 Where girders are integrated into the cross deck strips, inserts plates with integral gussets are to be incorporated. The inserts are to have a thickness not less than that of the girder top and bottom plates, as appropriate. The radius of main hatchway openings in way of ends of hatch girders at upper deck level is, in general, to be not less than 20 per cent of the width of the cross deck strip indicated in 4.4.5 with a minimum of 250 mm.

10.2.6 Scantlings of girders are to comply with the requirements of Ch 1,4.

10.3 Support for hatch cover fittings

10.3.1 The width of hatch coaming top plates is to be suitable to accommodate the hatch covers and associated fittings.

10.3.2 Local stiffening is to be fitted below hatch cover supporting devices and in some cases the thickness of the coaming in way may need to be increased, (*see also* Pt 3, Ch 11,4.2.3 and 5.2.12).

■ *Section 11* Hatch covers

11.1 General

11.1.1 The requirements of Pt 3, Ch 11 are to be complied with in addition to the requirements of this Section.

11.1.2 For the purposes of this Section, hatch covers are categorized into two types as indicated in Table 8.11.1.

Table 8.11.1 Definitions of hatch cover types

Type	Description
I	All edges of the hatch cover are supported by external structures
II	One or more edges of the hatch cover are self-supporting

11.1.3 The primary structure of hatch covers normally consists of an arrangement of deep beams and girders including hatch cover top plating.

11.1.4 For hatch covers subjected to point loads from containers, the primary structure scantlings are to be verified by direct calculation in accordance with 11.2.

11.1.5 Local stiffening is to be arranged below container corners.

11.2 Direct calculations

11.2.1 Direct calculations are to be based on 2D or 3D finite element analysis. Simplified boundary constraints may be applied in the modelling, provided this does not compromise the overall structural response.

11.2.2 The load cases, method of loading and acceptance criteria are indicated in Tables 8.11.2 and 8.11.3.

11.3 Omission of hatch cover gaskets

11.3.1 For ships which have hatch covers in the position defined in Pt 3, Ch 11,2.2.5, special consideration will be given to the omission of gaskets and a reduction in number of cleats. The agreement of the National Authority will be required in such cases.

11.3.2 The horizontal gap between panels is not to exceed 50 mm.

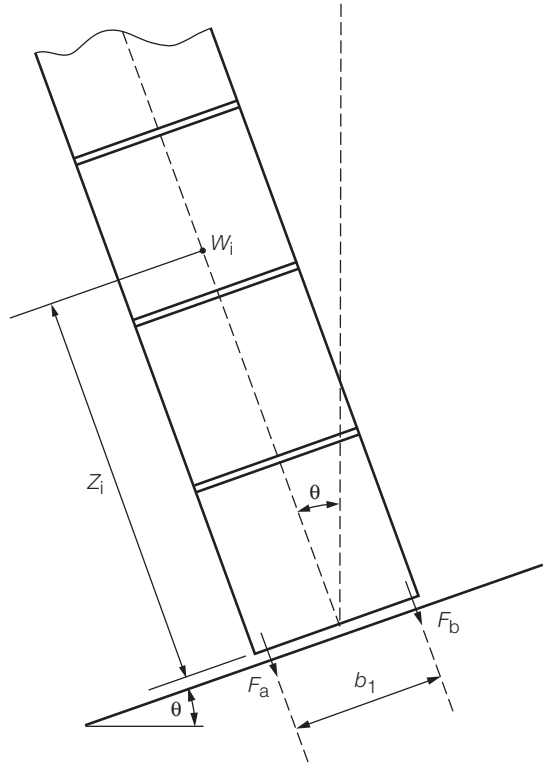

Fig. 8.11.1
Nomenclature for container loads

Table 8.11.2 Loadcases for direct calculations

Application	Loadcase	Applied loading
Type I, II	Loadcase 1 UDL Weather Load	Uniform distributed weather loading as defined in Pt 3, Ch 11,1.2 and 2.2.5
Type I, II	Loadcase 2 Container Load - Static Upright	Container loads normal to the hatch cover top plating, *see* Fig. 8.11.1 $F_a, F_b = \frac{W_T}{4}$
Type II	Loadcase 3 Container Load - Static Heeled	Static container loads normal to the hatch cover top plating, *see* Fig. 8.11.1 $F_a = 0{,}25\cos\theta\, W_T + 0{,}5\,\frac{\sin\theta}{b_1}\sum_{i=1}^{n}(W_i Z_i)$ $F_b = 0{,}25\cos\theta\, W_T - 0{,}5\,\frac{\sin\theta}{b_1}\sum_{i=1}^{n}(W_i Z_i)$
Symbols		
F_a and F_b = corner forces acting on a hatch cover at each end of the container b_1 = distance between the twistlocks n = number of containers in stack, *see* Note W_i = specified weight of each individual container, *see* Note W_T = total stack weight Z_i = lever to vertical centre of gravity of each container above base of stack. Vertical centre of gravity is assumed one third of the container depth above the base of the container θ = roll angle of 30º		
NOTE W_i and n are to be specified based on the most onerous stack weight combination.		

Table 8.11.3 Assessment criteria for direct calculations

Loadcase	Permissible bending stress N/mm^2 (kgf/mm^2)	Permissible shear stress N/mm^2 (kgf/mm^2)	Permissible deflection	Buckling requirement
1	Pt 3, Ch 11, Table 11.2.3 for uniform distributed (weather load)			
2	117,7/*k* (12,0/*k*)	68,7/*k* (7,0/*k*)	0,0035l_O	Pt 3, Ch 11, Table 11.2.1 *See* Note 1
3	164,5/*k* (16,8/*k*)	98,7/*k* (10,1/*k*)	*See* Notes 2 and 3	
Symbols				
l_O = unsupported span, in metres as shown in Fig. 11.1.2 in Pt 3 Ch 11.				

NOTES
1. In using Table 11.2.1 in Pt 3, Ch 11, the ratio σ_c/σ_b(or σ_{ac}/σ_b) is not to be less than 1,15 where the primary bending stress acts on either the longer or shorter panel edge.
2. The weathertightness is to be maintained where appropriate.
3. When the deflection exceeds 0,0045l_O, ultimate strength of the hatch cover is to be specially considered.
4. No allowance is to be given for the effect of cargo securing loads.

11.4 Omission of hatch covers

11.4.1 Proposals for the omission of hatch covers will be specially considered. Such proposals are to include details, established by model tests or alternative means, of the quantity of water likely to ingress the cargo holds under the worst sea-going and weather conditions, and the means by which it is to be efficiently and safely discharged. The proposals will also require to be agreed by the National Authority in order that an exemption from the Load Line Convention requirements for hatch covers may be obtained.

■ *Section 12* Strengthening for wave impact loads

12.1 General

12.1.1 The scantlings of plating, stiffeners and primary structure of forward and after portions of the hull are to be increased for protection against bow flare and wave impact pressure in accordance with Ch 2,4.3 and 5.2.

■ *Section 13* Container stowage systems

13.1 Cell guide systems

13.1.1 Where cell guide systems are fitted to support containers in holds or on deck, they are to comply with the requirements of Pt 3, Ch 14,7.

13.2 Stowage on decks/hatch covers

13.2.1 Strength of support structures for pads/pedestals under container corners, lashing equipment and lashing bridges is to comply with Pt 3, Ch 14,4.

■ *Section 14* Direct calculation

14.1 Procedures for calculation of combined longitudinal and torsional strength

14.1.1 For container ships as defined in 1.3.3(b), (c) and (d) or with beam greater than Panamax, longitudinal strength calculations are to be made in accordance with LR's ShipRight SDA Procedures.

14.1.2 For other container ships with large deck openings, longitudinal strength calculations are to be made in accordance with the requirements of Section 15.

14.2 Procedures for verification of primary structure scantlings

14.2.1 For container ships defined in 1.3.3 the strength of the ship's primary structure scantlings of double bottom, side and transverse bulkheads is to be assessed in accordance with LR's ShipRight SDA Procedures.

14.2.2 For other container ships the method for analysis of primary structure of double bottom, side structure and transverse bulkheads is to be agreed with LR. Acceptable methods will include the application of LR's ShipRight SDA procedures or simplified 2D or 3D (grillage) finite element analysis. For simple structural arrangements a structural model based on elastic beam theory may also be accepted.

■ *Section 15* Requirements for ships with large deck openings

15.1 Application

15.1.1 A container ship has large deck openings where any of the following criteria apply:

(a) $\dfrac{b}{B_1} \geq 0{,}7$

(b) $\dfrac{l_H}{l_{BH}} \geq 0{,}89$

(c) $\dfrac{b}{B_1} \geq 0{,}6$ and $\dfrac{l_H}{l_{BH}} \geq 0{,}7$

where

b = overall breadth of the cargo hold, in metres. Where there are multiple openings abreast, these are regarded as a single opening, and b is to be the sum of individual breadths of these openings

l_{BH} = distance between centres of the deck strip at each end of the opening, in metres. Where there is no further opening beyond the one under consideration, l_{BH} is to be measured to the end bulkhead position, *see also* Fig. 8.15.1

l_H = length of the opening, in metres

B_1 = extreme breadth of ship measured at the mid-length of the opening, in metres.

15.2 Definitions and information required

15.2.1 For the purposes of this Section the term 'open length' is defined as the distance between the aft end of the hatch opening adjacent to the engine room and the forward end of the foremost cargo hatch.

15.2.2 Combined stress calculations are to be carried out at a minimum of seven locations along the open length of the holds including the following:

(a) At the forward end of the engine room.

(b) At the forward end of the foremost cargo hatch.

(c) Three locations within 0,4*L* intermediate between point (a) and point (b).

(d) At any other sections where there are significant changes in cross-section properties.

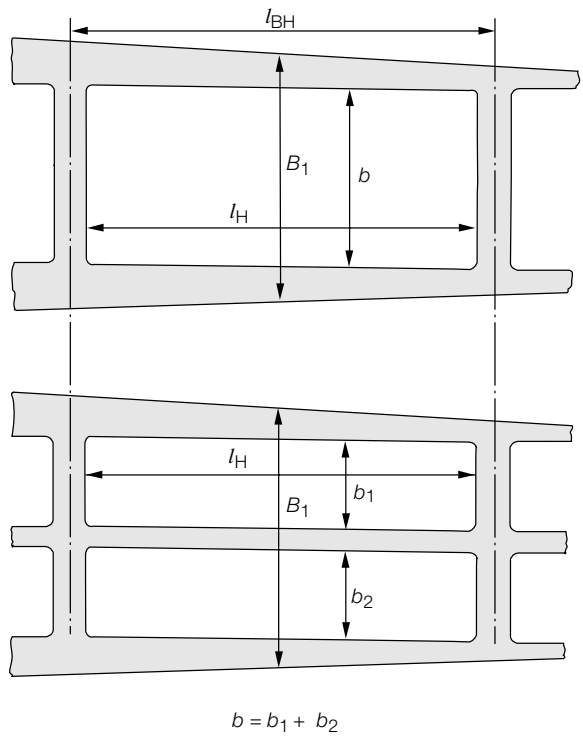

Fig. 8.15.1 Deck openings

15.3 Symbols and definitions

15.3.1 The following symbols and definitions are applicable to this Section unless otherwise stated:

Z_Y = actual hull section modulus about the transverse neutral axis at the position considered, in m^3

Z_Z = actual hull section modulus about the vertical neutral axis at the position considered, in metres

ε = the distance of the shear centre below the baseline of the ship, in metres

M_s = design still water bending moment at the section under consideration, in kN m (tonne-f m)

σ_c = combined stress at the position considered.

15.4 Design loadings

15.4.1 The design vertical wave bending moment, M_{WC}, at any position along the ship is defined as:

M_{WC} = $0{,}981 C_3\, C_0\, L^2\, B\, (C_b + 0{,}7)$ kN m

= $(0{,}1 C_3\, C_0\, L^2\, B\, (C_b + 0{,}7)$ tonne-f m)

$C_0 = 0{,}6 + 0{,}0942\left(\dfrac{L}{100} - 1\right)$

C_3 = coefficient depending on position along the length, L_{pp}, as defined in Table 8.15.1

L, B, C_b are given in 1.5.1.

15.4.2 The design horizontal wave bending moment, M_{HC}, at any position along the ship is defined as:

M_{HC} = $0{,}431 C_4\, L^2\, B$ kN m

= $(0{,}044 C_4\, L^2\, B$ tonne-f m)

Table 8.15.1 Distribution of wave bending moments and cargo torque

Position		Distribution factors		
		C_3		C_4
		$F_n \le 0{,}20$	$F_n = 0{,}30$	
Station 0	(A.P.)	0,00	0,00	0,0
2		0,14	0,14	0,2
4		0,30	0,30	0,4
6		0,58	0,58	0,6
8		0,87	0,87	0,8
10	(mid – L_{pp})	1,00	1,00	1,0
12		0,90	0,95	0,8
14		0,68	0,80	0,6
16		0,41	0,62	0,4
18		0,20	0,33	0,2
20	(F.P.)	0,00	0,00	0,0

NOTE
For intermediate values of F_n, the factor is to be determined by linear interpolation, and for values greater than 0,3 linear extrapolation is to be used

$$F_n = \frac{0{,}164V}{\sqrt{L_{pp}}}$$

C_4 = coefficient depending on position along the length, L_{pp}, as defined in Table 8.15.1
L and B are given in 1.5.1.

15.4.3 The design hydrodynamic torque, M_{WTC} at any position along the ship is defined as:

$$M_{WTC} = 0{,}000981 C_5\, e^{-0{,}00295L}\, L\, B^3\, C_T \left(1{,}75 + 1{,}5\,\frac{\varepsilon}{D}\right) \text{ kNm}$$

$$= \left(0{,}0001 C_5\, e^{-0{,}00295L}\, L\, B^3\, C_T \left(1{,}75 + 1{,}5\,\frac{\varepsilon}{D}\right) \text{ tonne-fm}\right)$$

C_T = $13{,}2 - 43{,}4C_w + 78{,}9C_w^2$
C_w = the water plane area coefficient at draught T, but need not exceed $0{,}165 + 0{,}95C_b$

$$C_5 = \frac{1}{2}\left[1 - \cos\left(2\pi\,\frac{x}{L_{pp}}\right)\right]$$

x = position along the length L_{pp} measured from A.P.
L, L_{pp}, B, D, T and C_b, are given in 1.5.1
ε is given in 15.3.1.

15.4.4 The design value of static cargo torque, M_{STC} at any position along the ship is defined as:

M_{STC} = $15{,}7C_4\, B\, n_s\, n_t$ kN m
(M_{STC} = $1{,}6C_4\, B\, n_s\, n_t$ tonne-f m)
n_s = the number of stacks of containers over the breadth, B
n_t = the number of tiers of containers in cargo holds amidships, excluding containers on deck or on the hatch covers
C_4 = as defined in 15.4.2
B is given in 1.5.1.

15.5 Combined stress

15.5.1 The combined stress, σ_c is to be calculated at a number of sections along the ship as defined in 15.2.2:

$$\sigma_c = \sigma_{HC} + \sigma_{WTC} + \sigma_{STC} + \sigma_{SC} + \sigma_{WC}$$

$$\sigma_{SC} = \frac{M_s}{Z_y} \times 10^{-3} \text{ N/mm}^2 \text{ (kgf/mm}^2\text{)}$$

$$\sigma_{WC} = 0{,}6\,\frac{M_{WC}}{Z_y} \times 10^{-3} \text{ N/mm}^2 \text{ (kgf/mm}^2\text{)}$$

$$\sigma_{HC} = C_6\,\frac{M_{HC}}{Z_z} \times 10^{-3} \text{ N/mm}^2 \text{ (kgf/mm}^2\text{)}$$

σ_{WTC}, σ_{STC} are to be evaluated by approved calculation procedures
σ_{STC} = warping stress due to static cargo torque
σ_{WTC} = warping stress due to hydrodynamic torque
C_6 = co-efficient for shear lag depending on vertical location of the point under consideration
= 0,6 of inboard edge of strength deck
= 1,0 at base line
= intermediate positions by interpolation
other symbols are as defined in 15.3 and 15.4.

15.5.2 At each section the stresses are to be calculated at:
(a) the inboard edge of the strength deck;
(b) the point on the bilge where the combined stress is greatest; and
(c) the top of continuous hatch coaming (where fitted).

15.6 Permissible stress

15.6.1 The combined stress σ_c at any position along the open length is to be not more than indicated in Table 8.15.2.

15.6.2 The assessment of combined stress may conveniently be presented in the form of a combined stress diagram as indicated in Fig. 8.15.2.

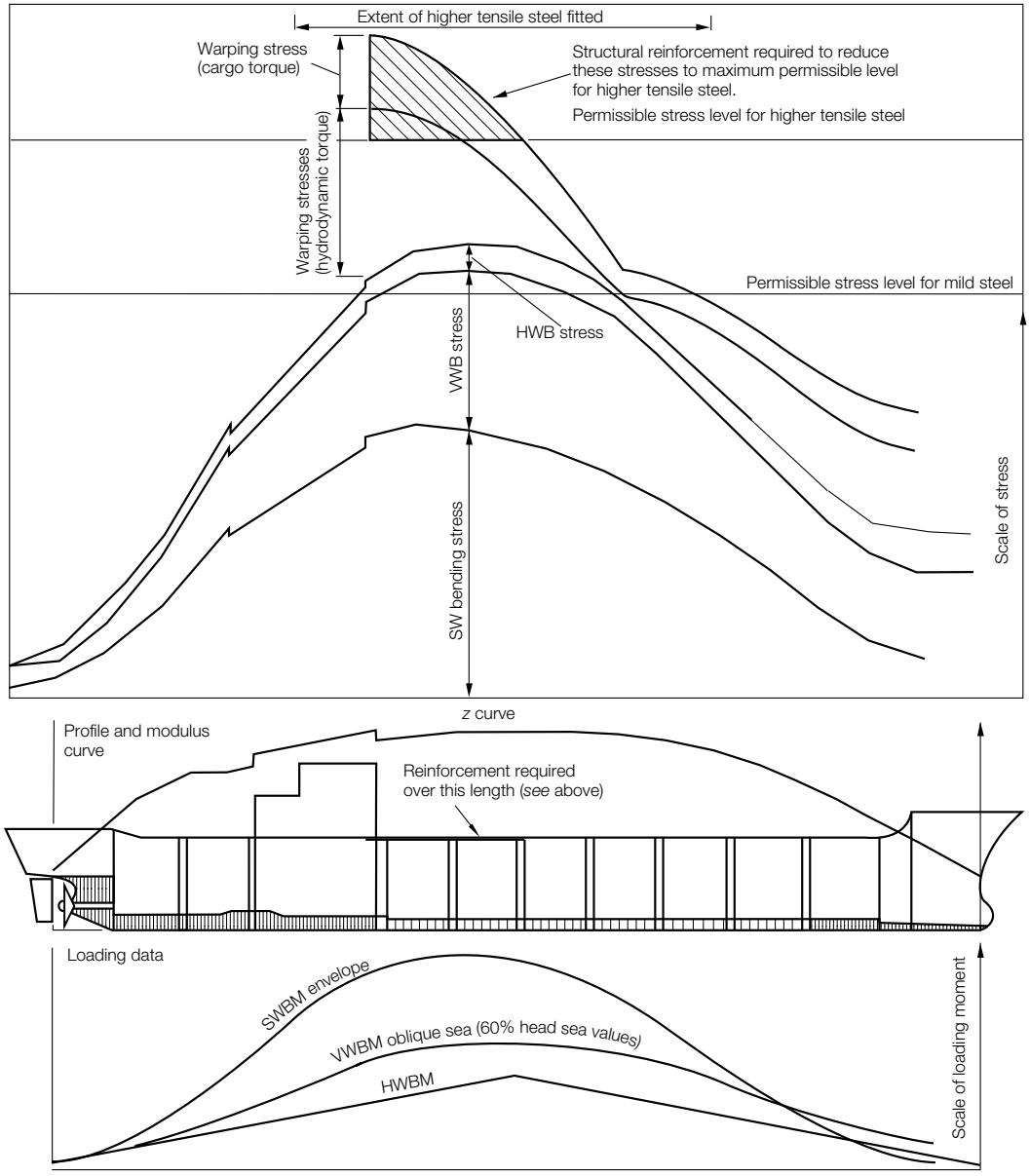

NOTES
1. These diagrams are for illustration only and are not to scale.
2. A similar diagram is to be prepared for bottom.

Fig. 8.15.2 Combined stress diagram for deck – Oblique sea condition

Table 8.15.2 Permissible stress

Position	Permissible combined stress N/mm^2 (kgf/mm^2)
Top of continuous hatch coaming where fitted	$\sigma_C = \frac{175}{k_L} \left(\frac{17,84}{k_L} \right)$
Elsewhere	$\sigma_C = \frac{157}{k_L} \left(\frac{16,0}{k_L} \right)$

Section

1 **General**

2 **Materials and protection**

3 **Longitudinal strength**

4 **Hull envelope plating**

5 **Hull framing**

6 **Inner hull, inner bottom and longitudinal oiltight bulkheads**

7 **Transverse oiltight bulkheads**

8 **Non-oiltight bulkheads**

9 **Primary members supporting longitudinal framing**

10 **Construction details and minimum thickness**

11 **Ships for alternate carriage of oil cargo and dry bulk cargo**

12 **Heated cargoes**

13 **Access arrangements and closing appliances**

14 **Direct calculations**

■ *Section 1* General

1.1 General

1.1.1 This Chapter applies primarily to the arrangements and scantlings within the cargo tank region of sea-going tankers having integral cargo tanks, for the carriage of oil having a flash point not exceeding 60ºC (closed cup test), in association with the class notation indicated in 1.3.1 or 1.4.1. Except as indicated in 1.1.2, 1.1.3 and 1.1.4, the cargo spaces are to be bounded by side and bottom dedicated water ballast tanks or void spaces constituting a double hull for the ship, *see* Table 9.1.1.

1.1.2 Double side tanks may be dispensed with for tankers of less than 5000 tonnes deadweight where each cargo tank capacity does not exceed 700 m^3, *see* Table 9.1.1.

1.1.3 Double bottom tanks may be dispensed with for tankers of 5000 tonnes deadweight or greater subject to compliance with the requirements of 1.2.18.

1.1.4 Double bottoms and double sides may be dispensed with for vessels less than 600 tonnes deadweight, *see* Table 9.1.1.

1.1.5 Where only oils having flash points exceeding 60ºC are to be carried, the Rule requirements and class notation will be modified accordingly the additional class notation 'F.P. exceeding 60ºC' will be entered in the *Register Book*.

1.1.6 Oil cargoes listed in Table 9.1.2 are those which are generally envisaged as being carried in ships classed in accordance with this Chapter.

1.1.7 The scantlings and arrangements of tankers intended for cargoes other than oil will be specially considered in relation to the characteristics of the cargo, and the class notation will be modified accordingly. A full list of such cargoes for a particular ship, with special requirements as applicable, can be provided by Lloyd's Register (hereinafter referred to as 'LR') on application. Chemical cargoes listed in Chapter 18 of the *Rules and Regulations for the Construction and Classification of Ships for the Carriage of Liquid Chemicals in Bulk* (hereinafter referred to as the Rules for Ships for Liquid Chemicals) may be carried in ships for which the arrangements, scantlings and materials comply with the requirements of that Chapter. Special consideration will also be given to the carriage of cargoes with a relative density greater than 1,025, *see also* 1.3 and 1.4.

1.1.8 Where higher tensile steel is incorporated in principal structural members, a suitable descriptive note may be entered in the *Register Book*.

1.1.9 The Regulations for classification and assignment of the above notations and other notations, as appropriate to the arrangements, scantlings and service are provided for in Pt 1, Ch 2,2.

1.2 Application and ship arrangement

1.2.1 Double hull tankers with length, *L*, greater than or equal to 150 m with structural configuration as shown in Table 9.1.3 are defined as 'CSR Oil Tankers' and are to comply with 1.3.

1.2.2 The applicable Rules for Double hull tankers with length, *L*, greater than or equal to 150 m of unusual hull form or structural arrangements will be specially considered.

1.2.3 Double hull tankers with length, *L*, less than 150 m are defined as 'Non-CSR Oil Tankers' and are to comply with 1.4.

1.2.4 Any dry tanks, or tanks intended for water ballast and thus empty in the loaded condition, are to be so arranged that they cannot be used for any other purpose.

1.2.5 Cofferdams are to be provided at the forward and after ends of the oil cargo spaces; cofferdams are to be at least 760 mm in length and are to cover the whole area of the end bulkheads of the cargo spaces.

1.2.6 A pump room, oil fuel bunker or water ballast tank will be accepted in lieu of a cofferdam.

Table 9.1.1 Cargo tank boundary requirements

Deadweight (DWT) tonnes	Minimum double side width (d_s) metres	Minimum double bottom depth (d_b) metres
DWT ≥ 5000	$d_s = 0{,}5 + \frac{DWT}{20\,000}$ or $d_s = 2{,}0$ whichever is the lesser, but not less than 1,0	$d_b = \frac{B}{15}$ or $d_b = 2{,}0$ whichever is the lesser, but not less than 1,0
600 ≤ DWT < 5000	$d_s = 0{,}4 + \frac{2{,}4\,DWT}{20\,000}$ or $d_s = 0{,}76$ whichever is the greater, *see* Note 2	$d_b = \frac{B}{15}$ or $d_b = 0{,}76$ whichever is the greater
DWT < 600	$d_s = 0$	$d_b = 0$

NOTES
1. The symbols *DWT*, d_s and d_b are defined in 1.5.
2. Where each cargo tank capacity does not exceed 700 m^3, the value of d_s is taken as 0 and the inner bottom line is to run parallel to the line of the midship flat of bottom as shown in Fig. 9.1.2.
3. Where the double bottom tank is fitted, the centre girder depth is to be not less than as required by 9.3.3.

Table 9.1.2 Oil cargoes suitable for carriage in oil tankers, *see* Note 1

Asphalt solutions
(*see* Note 2)
Blending Stocks
Roofers Flux
Straight Run Residue

Oils
Clarified
Crude Oil
Mixtures containing crude oil
Diesel Oil
Fuel Oil No. 4
Fuel Oil No. 5
Fuel Oil No. 6
Residual Fuel Oil
Road Oil
Transformer Oil
Lubricating Oils and
Blending Stocks
Mineral Oil
Motor Oil
Penetrating Oil
Spindle Oil
Turbine Oil

Distillates
Straight Run
Flashed Feed Stocks

Gas Oil
Cracked

Gasoline Blending Stocks
Alkylates - fuel
Reformates
Polymer - fuel

Gasolines
Casinghead (natural)
Automotive
Aviation
Straight Run
Fuel Oil No. 1 (Kerosene)
Fuel Oil No. 1-D
Fuel Oil No. 2
Fuel Oil No. 2-D

Jet Fuels
JP-1 (Kerosene)
JP-3
JP-4
JP-5 (Kerosene, Heavy)
Turbo Fuel
Kerosene
Mineral Spirit

Naphtha (*see* Note 3)
Solvent
Petroleum
Heartcut Distillate Oil

NOTES
1. This list of oils is taken from Appendix 1 to Annex 1 of the MARPOL Convention. Special consideration will be given to the carriage of oil cargoes not included in the above list.
2. Asphalt solutions, *see* Chapter 18 of the Rules for Ships for Liquid Chemicals.
3. For naphtha coal tar and naphthalene molten, *see* Chapter 17 of the Rules for Ships for Liquid Chemicals.

1.2.7 Where the lower portion of the pump room is recessed into the machinery space, the height of the recess is not, in general, to exceed one-third of the moulded depth above the keel, *see also* Pt 5, Ch 15,1.

1.2.8 Where a compartment or tank, such as a fore peak tank, forms a cofferdam, access is to be from the open deck. Alternatively, any space through which it is necessary to pass in order to obtain access is to conform to the requirements of Pt 6, Ch 2,13. Oil engine or electrically driven pumps are not to be sited in the space containing the access to such cofferdams.

1.2.9 A cofferdam is also to be arranged between a cargo oil tank and accommodation spaces, and between cargo oil tanks and spaces containing electrical equipment, other than spaces where the only items of electrical equipment are lighting fittings complying with Pt 6, Ch 2,13. Where a corner-to-corner situation occurs, protection may be formed by a diagonal plate across the corner. The scantlings and testing arrangements are to comply with Rule requirements for cofferdam bulkheads, and arrangements are to be made to enable the space to be filled with water ballast to assist in gas freeing, *see also* Pt 5, Ch 15,3. Suitable corrosion protection, drainage and gas-freeing arrangements are to be provided to such spaces.

1.2.10 Passages or tunnels passing through, or adjacent to, a cargo oil tank and not separated from it by a cofferdam, are to be provided with mechanical ventilation, and any access is to be from the open deck.

1.2.11 Arrangements are to be provided to enable double bottom and vertical wing tanks to be filled with water ballast to assist in gas freeing these tanks, *see* Pt 5, Ch 15,3.

1.2.12 Fittings within cargo tanks and pump rooms are to be securely fastened to the structure.

Table 9.1.3 Structural arrangement

Arrangement	Typical configuration	$L < 150$	$L \geq 150$
No longitudinal bulkhead	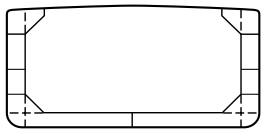	Non CSR	CSR (specially considered)
One or two longitudinal bulkhead(s)	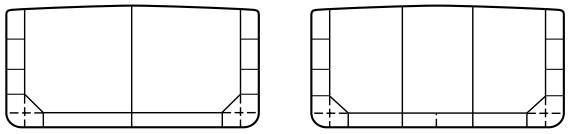	Non CSR	CSR
Trunk deck in association with longitudinal bulkhead(s) (*see* Ch 10,6)	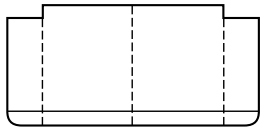	Non CSR	CSR
Double deck in association with a centreline bulkhead	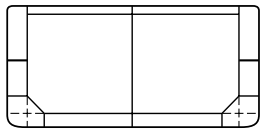	Non CSR	CSR (specially considered)
Mid-deck in association with a centreline bulkhead or centreline girders	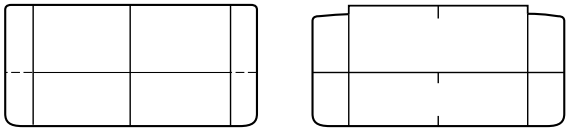	Non CSR	CSR (specially considered)

1.2.13 Accommodation, control and service spaces are to be located clear of the cargo tank region such that a single failure of deck or bulkhead will not allow cargo fumes into these spaces. Navigation positions, where fitted above the cargo tank region, are to be separated from the cargo tank deck by means of an open space with a height of at least 2,0 m.

1.2.14 Where spill retainment flats are fitted at the sides of the weather deck, separate arrangements are to be provided for freeing the deck of oil and water respectively, *see also* Pt 3, Ch 10,5.1.1.

1.2.15 Alternative arrangements which are proposed as being equivalent to the Rules will receive individual consideration, taking into account any relevant National Authority requirements.

1.2.16 Reference should also be made to the relevant Regulations of the *International Convention for the Safety of Life at Sea, 1974* and applicable amendments.

1.2.17 Cargo spaces are to be bounded by double bottom and double side tanks or void spaces such that the distance between the cargo tank boundary and the shell plating is not less than that given in Table 9.1.1 and Fig. 9.1.1, except as otherwise specified in 1.2.18 and 1.2.19. Cargo or oil fuel are not to be carried in double bottom or double side tanks.

1.2.18 Where $DWT \geq 5000$ tonnes, double bottom tanks as required by 1.2.17 may be dispensed with, provided the following requirements are complied with:

(a) The cargo height, h_c, in contact with the bottom shell plating is to be not greater than:

$$h_c = \frac{1{,}025T_m - 10{,}2P_v}{1{,}1\rho}$$

where the symbols are defined in 1.6.

(b) Where a mid-deck dividing the cargo oil tanks into upper and lower spaces is arranged, it is to be located at a height of not less than the lesser of $\frac{B}{6}$ or 6 m, but not more than $0{,}6D$, above the base line.

(c) Below a level $1{,}5d_b$ above the base line, the cargo tank boundary line may be vertical down to the bottom shell plating as shown in Fig. 9.1.3.

1.2.19 Alternative arrangements which are equivalent to 1.2.17 will receive individual consideration, taking into account any relevant National Authority requirements.

1.2.20 The length of each cargo tank is not to exceed 10 m or the appropriate value obtained from Table 9.1.4, whichever is the greater.

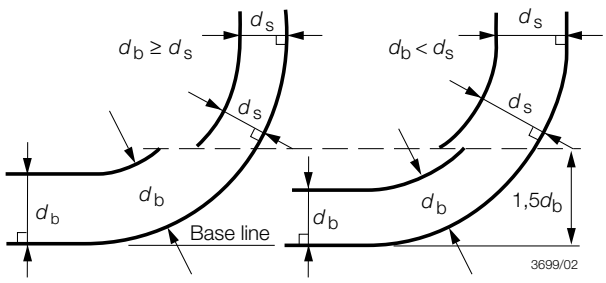

Fig. 9.1.1
Cargo tank boundary lines for oil tankers having double bottom and double side tank arrangements (*See* Table 9.1.1)

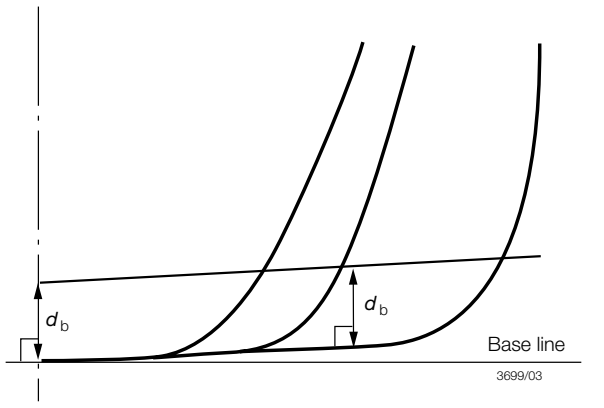

Fig. 9.1.2
Cargo tank boundary lines for oil tankers having double bottom arrangement (*See* Table 9.1.1)

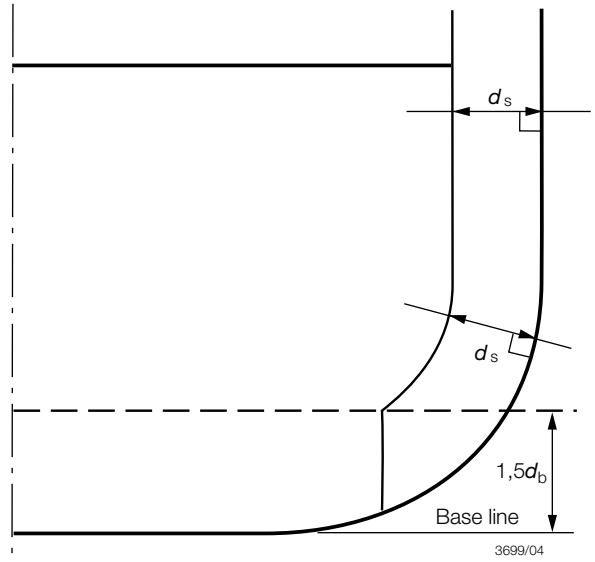

Fig. 9.1.3
Cargo tank boundary lines for oil tankers having mid-deck arrangement (*See* 1.2.18)

1.2.21 Where DWT ≥ 5000 tonnes, the cargo pump room shall be provided with a double bottom such that at any cross-section the depth of each double bottom tank or space shall be such that the distance d_c, as defined in 1.5, is not less than the lesser of $\frac{B}{15}$ m and 2 m.

d_c is in no case to be less than 1 m.
In the case of cargo pump rooms whose bottom plate is located above the base line by at least the minimum height required, there will be no need for a double bottom construction in way of the cargo pump-room

1.2.22 Notwithstanding the requirements of 1.2.21, above, where the flooding of the cargo pump-room would not render the ballast or cargo pumping system inoperative, a double bottom need not be fitted.

Table 9.1.4 Permissible length of cargo tanks, *see* 1.2.20

Number of longitudinal bulkheads inside cargo tanks		One (on centreline)	Two	Three (one on centreline)	Where no longitudinal bulkhead is arranged or where longitudinal bulkheads are perforated across breadth of cargo tanks
Length of wing cargo tank		$\left(0{,}25\frac{b_i}{B} + 0{,}15\right) L_L$	$0{,}2L_L$	$0{,}2L_L$	$\left(0{,}5\frac{b_i}{B} + 0{,}1\right) L_L$ or $0{,}2L_L$ whichever is the lesser
Length of centre tank	$b_i \geq 0{,}2B$	—	$0{,}2L_L$	$0{,}2L_L$ port and starboard	
	$b_i < 0{,}2B$	—	$\left(0{,}5\frac{b_i}{B} + 0{,}1\right) L_L$	$\left(0{,}25\frac{b_i}{B} + 0{,}15\right) L_L$ port and starboard	

NOTE
The symbols L_L, B and b_i are defined in 1.5.

1.3 Class notation and applicable Rules for CSR Double Hull Oil Tankers

1.3.1 In general, CSR Double Hull Oil Tankers are to comply with 1.3.2 to 1.3.8 and the *IACS Common Structural Rules for Double Hull Oil Tankers* (*CSR*) for the draught required and will be eligible to be classed **100A1 Double Hull Oil Tanker CSR, ESP**.

1.3.2 Class notations applicable to CSR double hull oil tankers are defined as follows:

- **CSR**
  Identifies the double hull oil tanker as being compliant with the *IACS Common Structural Rules for Double Hull Oil Tankers*
- **ESP**
  Identifies the double hull oil tanker as being subject to an Enhanced Survey Programme as detailed in Pt 1, Ch 3,3 and Ch 3,6, *see also* Pt 1, Ch 2,2.3.12.

1.3.3 Materials are to comply with the *Rules for the Manufacture, Testing and Certification of Materials* (hereinafter referred to as the Rules for Materials). Corrosion protection is to comply with Pt 3, Ch 2,3.

1.3.4 The rudder and rudder stock are to comply with Pt 3, Ch 13,2.

1.3.5 Ice strengthening is to be in accordance with Pt 3, Ch 9.

1.3.6 The 'Construction Monitoring' (CM) procedures detailed in the *ShipRight Procedures Manual*, published by LR, are mandatory for oil tankers greater than 190 m in length and for other tankers of abnormal hull form, or of unusual structural configuration or complexity.

1.3.7 The 'ShipRight Procedures' for the hull construction of ships are detailed in Pt 3, Ch 16 and the classification notations and descriptive notes associated with these procedures are given in Pt 1, Ch 2,2.

1.3.8 Ships intended to carry heated cargoes are to comply with Section 12.

1.4 Class notation and applicable Rules for non-CSR Double Hull Oil Tankers

1.4.1 In general, non-CSR Double Hull Oil Tankers are to comply with 1.4.2 to 1.4.7 for the draught required and will be eligible to be classed **100A1 Double Hull Oil Tanker, ESP**.

1.4.2 The notation **ESP** serves to identify the ship as being subject to an Enhanced Survey Programme as detailed in Pt 1, Ch 3,3 and Ch 3,6, *see also* Pt 1, Ch 2,2.3.12.

1.4.3 At the Owner's request, the notation **MARPOL 20.1.3** may be appended to the notation **100A1 Double Hull Oil Tanker** for vessels not meeting the minimum double side width (d_s) requirements of Table 9.1.1 but which comply with MARPOL Annex I, Regulation 20.1.3.

1.4.4 At the Owner's request, the notation **MARPOL 21.1.2** may be appended to the notation **100A1 Double Hull Oil Tanker** for vessels of less than 5000 tonnes deadweight which have a complete double hull in accordance with MARPOL Annex I, Regulation 21.1.2.

1.4.5 Where the length of the ship is greater than 190 m, or where the structural arrangements are considered such as to necessitate it, the scantlings of the primary supporting structure are to be assessed by direct calculation and the ShipRight notations **SDA**, **FDA** and **CM** are mandatory, *see* 1.4.6 and Section 14.

1.4.6 The 'ShipRight Procedures' for the hull construction of ships are detailed in Pt 3, Ch 16 and the classification notations and descriptive notes associated with these procedures are given in Pt 1, Ch 2,2.

1.4.7 The disposition of transverse bulkheads is to comply with the requirements of Pt 3, Ch 3,4, as applicable to ships with machinery located aft.

1.4.8 Arrangements and scantlings forward and aft of the cargo tank region are to comply with Pt 3, Ch 5, Ch 6 and Ch 7. The remaining requirements of Part 3 are also to be complied with as appropriate to the intended arrangements.

1.4.9 Arrangements pertaining to gangways, bulwarks and rails are to comply with the requirements of Pt 3, Ch 8.

1.4.10 The structural configurations may include one or more of the arrangements shown in Table 9.1.3. these provisions do not preclude the fitting of additional bulkheads or the perforation of longitudinal bulkheads.

1.4.11 The bottom shell, inner bottom and deck are generally to be framed longitudinally in the cargo tank region where the ship length, *L*, exceeds 75 m. However, consideration will be given to alternative proposals for ships of special design.

1.4.12 The side shell, inner hull bulkheads and longitudinal bulkheads are generally to be longitudinally framed where the ship length, *L*, exceeds 150 m, but alternative proposals, taking account of resistance to buckling, will be considered.

1.4.13 Where the side shell is longitudinally framed, the inner hull bulkheads are to be similarly constructed.

1.4.14 Provided the ship length, *L*, does not exceed 200 m the longitudinal bulkheads may be horizontally corrugated. Vertically corrugated centreline bulkheads may also be considered on the basis of direct calculations.

1.4.15 In general, the primary member scantlings will require to be determined by direct calculation, *see also* 9.1.3.

1.4.16 Alternative arrangements, which are proposed as being equivalent to the Rules, will receive individual consideration. Particular attention is to be paid to deflection of members and to the ability of the structure to resist buckling. Where necessary, additional calculations will be required.

1.4.17 For additional requirements for single hull oil tankers, *see* Chapter 10.

1.4.18 The scantlings of structural items may be determined by direct calculation.

1.5 General definitions and symbols

1.5.1 The following symbols and definitions are applicable to this Chapter unless otherwise stated:

L, L_L, B, D, T as defined in Pt 3, Ch 1,6.

d_c = the height between the ship's base line and the bottom of the cargo pump room, in metres

DWT = deadweight, in tonnes, at the summer load waterline

b = the width of plating supported by the primary or secondary member, in metres or mm respectively

b_e = the effective width, in metres, of end brackets as determined from Pt 3, Ch 3,3

b_i = minimum distance from side shell to inner hull/outer longitudinal bulkhead of the tank in question measured inboard at right angles to the centreline at the summer load waterline, in metres, *see* Table 9.1.4

d_b = the distance, in metres, between the bottom of the cargo tanks and the moulded line of the bottom shell plating measured at right angles to the bottom shell plating as shown in Fig. 9.1.1 and Fig. 9.1.2

d_s = the distance, in metres, between the cargo tank boundary and the moulded line of the side shell plating measured at any cross-section at right angles to the side shell as shown in Fig. 9.1.1 and Fig. 9.1.3

h = the load height applied to the item under consideration, in metres

k_L, k = higher tensile steel factors. For the determination of these factors, see Pt 3, Ch 2,1. For mild steel, k_L, k may be taken as 1,0

l_e = effective length, in metres, of the primary or secondary member, measured between effective span points. For determination of span points, *see* Pt 3, Ch 3,3

s = spacing of secondary members, in mm

t = thickness of plating, in mm

I = the moment of inertia, in cm^4, of a primary or secondary member, in association with an effective width of attached plating determined in accordance with Pt 3, Ch 3,3

L_1 = length of ship, in metres, but need not be taken greater than 190 m

P_v = pressure/vacuum relief valve positive setting, in bar

T_m = minimum operating moulded draught of the ship at amidships under any expected cargo loading condition, in metres

Z = the section modulus, in cm^3, of the primary or secondary member, in association with an effective width of attached plating determined in accordance with Pt 3, Ch 3,3

ρ = maximum cargo density, in t/m^3.

1.5.2 Where symbols not defined in 1.5.1 are used these are defined at the head of the Section concerned.

1.5.3 For oil tankers of double hull configuration the main structural and spatial terminology within the cargo length, as used in this Chapter, is shown in Fig. 9.1.4.

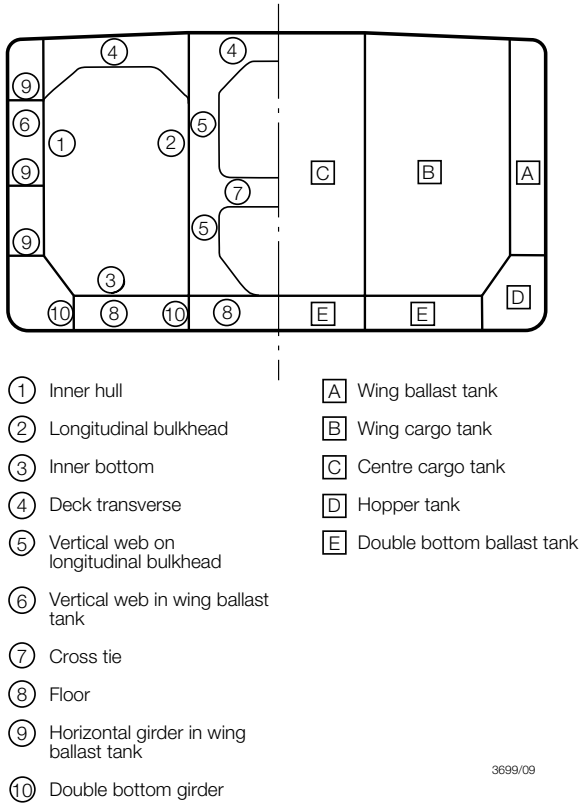

Fig. 9.1.4 Structural and spatial terminology

1.5.4 The expression 'primary member' as used in this Chapter is defined as a girder, floor, transverse, vertical web, stringer, cross-tie or buttress. 'Secondary members' are supporting members other than primary members.

1.6 Information required for CSR Double Hull Oil Tankers

1.6.1 In addition to the plans required by *IACS Common Structural Rules for Double Hull Oil Tankers (CSR)* the following additional plans and information is to be submitted.

- Rudder, stock and tiller;
- Ice Strengthening.
- Freeboard plan or equivalent showing freeboards and items relative to the conditions of assignment.

1.7 Information required for non-CSR Double Hull Oil Tankers

1.7.1 In addition to the plans required by Pt 3, Ch 1,5, plans showing the connections for all longitudinals and other framing members and arrangements at intersections of transverse and longitudinal framing are also to be submitted.

1.7.2 Any dry tanks or tanks for water ballast only, are to be indicated on the principal structural and arrangement plans.

1.7.3 The information required by Pt 3, Ch 4,4 is to be forwarded as soon as possible and preferably when the midship section is submitted.

1.7.4 A docking plan is to be submitted for consideration of strength requirements in association with the intended docking condition.

1.7.5 A plan showing the location of all openings in the deck is to be submitted. Where it is intended to provide holes in the deck for staging wires, these holes are also to be shown. Full particulars of the proposed closing arrangements for all deck openings are to be submitted.

1.7.6 Information is required indicating the equipment provided for the acceptable means of access to meet the minimum requirements for Close-up Surveys, *see also* 13.2.8, 13.2.9 and Pt 1, Ch 3,7.

1.7.7 A diagrammatic plan verifying compliance with the requirements of 1.2.17 or 1.2.18 as appropriate is to be submitted.

■ *Section 2* Materials and protection

2.1 General

2.1.1 Materials, grades of steel and protection of materials are to comply with the requirements of Pt 3, Ch 2 and the Rules for Materials (Part 2).

2.2 Corrosion protection coatings for salt water ballast spaces

2.2.1 The requirements of Pt 3, Ch 2,3.6 are to be complied with.

2.3 Aluminium structure, fittings and paint

2.3.1 Aluminium may, under certain circumstances give rise to incendive sparking on impact with steel, the following requirements are therefore to be complied with:

(a) Aluminium fittings in tanks used for the carriage of oil, and in cofferdams and pump rooms are to be avoided wherever possible.

(b) Where fitted, aluminium fittings, units and supports, in tanks used for the carriage of oil, cofferdams and pump rooms are to satisfy the requirements specified in Pt 3, Ch 2,3 for aluminium anodes.

(c) The danger of mistaking aluminium anodes for zinc anodes must be emphasised. This gives rise to increased hazard if aluminium anodes are inadvertently fitted in unsuitable locations.

(d) The underside of heavy portable aluminium structures such as gangways, etc., is to be protected by means of hard plastic or wood cover in order to avoid the creation of smears when dragged or rubbed across steel, which if subsequently struck, may create an incendive spark. It is recommended that such protection be permanently and securely attached to the structures.

2.3.2 For permissible locations of aluminium anodes, *see* Pt 3, Ch 2,3.4.

2.3.3 Paint containing aluminium should not be used in positions where cargo vapours may accumulate unless it has been shown by appropriate tests that the paint to be used does not increase the incendive sparking hazard. Tests need not be performed for coatings containing less than 10 per cent aluminium by weight.

2.4 Other materials

2.4.1 The suitability of coatings and their compatibility with intended cargoes are the responsibility of the Builder and the Owner. LR will, however, require the confirmation of the coating manufacturers that coatings which are used to protect the cargo tank structure are in order for the list of defined cargoes. A copy of the coating manufacturer's product resistance list is to be placed on board.

2.4.2 Attention is drawn to the requirements of Pt 3, Ch 11,7.1.4 in respect of compatibility of cargoes and hatch packing materials. The packing material is to be resistant to both the liquids and vapours to which it is exposed.

2.4.3 Some plastics and rubbers are unsuitable for certain cargoes other than oil. In such cases the manufacturer's advice should be sought.

2.4.4 Some materials or their alloys are unsuitable for certain cargoes other than oil. Where such cargoes are to be carried, the use of these materials is not permitted in locations where they may come into contact with the cargo or its vapours, *see also* 1.1.7.

■ *Section 3* Longitudinal strength

3.1 General

3.1.1 The longitudinal strength standard is to comply with the relevant requirements of Pt 3, Ch 4.

3.1.2 The readout points for loading instruments, fitted in accordance with the requirements of Pt 3, Ch 4,8.3 are to be positioned at the transverse bulkheads. In general, except when the instrument calculates the maximum values between readout points, the spacing of readout points within the cargo tank length is not to exceed five per cent of the ship length with intermediate points arranged between bulkheads as necessary.

3.2 Symbols

3.2.1 The symbols used in this Section are defined in 1.6.

3.3 Loading conditions

3.3.1 The loading conditions which are to be included in the Loading Manual and examined for longitudinal strength are given in Pt 3, Ch 4,5.

3.3.2 The Loading Manual is to contain the calculated still water bending moments and shear forces for the conditions proposed and the maximum permissible values calculated in accordance with Pt 3, Ch 4.

3.3.3 The strengthening of bottom forward derived in accordance with the requirements of Pt 3, Ch 5,1 is to be based on the minimum draught forward obtained using segregated ballast tanks only, without recourse to ballasting of cargo tanks.

3.3.4 Where bottom forward strengthening has not been arranged, at least one ballast departure and one ballast arrival condition providing for a forward draught of at least 0,045*L* is to be included in the Loading Manual, *see also* Pt 3, Ch 5,1.5.

3.3.5 Where part-load conditions are proposed with a forward draught less than that for which the bottom forward arrangements and scantlings have been approved, the Loading Manual is to provide for the addition of ballast in segregated ballast tanks only as necessary to attain the required draught in heavy weather.

3.3.6 Conditions which provide for wing and centre cargo tanks abreast to be filled, with adjacent wing and centre cargo tanks empty, should, in general, be avoided. Similarly, conditions which provide for differential loading of port and starboard wing cargo tanks with centre cargo tanks empty should also be avoided. Where such conditions are contemplated, they will be subject to special consideration which may involve additional calculation in respect of the resultant effects on transverse strength and centre tank cross-tie.

3.3.7 Where a double bottom tank is omitted in accordance with 1.3.7 a minimum operating draught T_m is to be indicated on the midship section plan, the Loading Manual and Loading Instrument.

3.3.8 Tanks intended for water ballast are to be indicated in the Loading Manual.

3.3.9 Where loading conditions having partially filled tanks are contemplated, attention is drawn to the need to ensure that the scantlings of the boundary bulkheads are capable of withstanding the loads imposed by the movement of liquid in the tanks, *see* 6.1.2, 7.1.2 and 14.2.2.

■ *Section 4*
Hull envelope plating

4.1 General

4.1.1 The thickness of hull envelope plating amidships is to be as necessary to comply with the hull section modulus, shear strength and buckling requirements of Pt 3, Ch 4, but is to be not less than as shown in Table 9.4.1 for the parts itemised in Fig. 9.4.1. Panel stability is also to be confirmed by direct calculation taking account of shear stress and direct stresses derived from both transverse and longitudinal strength investigation.

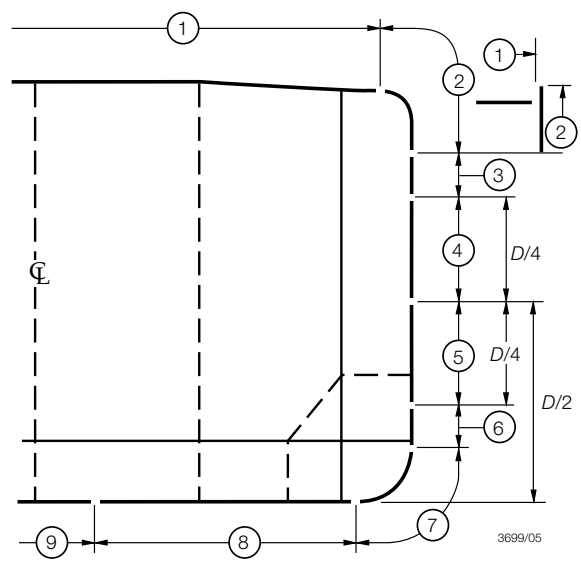

Fig. 9.4.1
Hull envelope plating – Itemization of parts
(*See* Table 9.4.1)

4.1.2 For requirements in respect of structural details, bilge keels, attachments, etc., *see* Pt 3, Ch 10. In addition the *ShipRight FDA Procedure, Structural Detail Design Guide* (SDDG), indicates recommended structural design configurations for double hull tanker structural details to assess and improve the relative fatigue life performance of the details in critical areas.

Table 9.4.1 Hull envelope plating – minimum thickness, in mm

Hull envelope plating – minimum thickness, in mm			
Longitudinally framed	Item	Item No. (*see* Fig. 9.4.1)	Transversely framed (*see* 1.3 for limits of application)
$t = \frac{s}{J} + 2{,}0$ (*see* Note 1)	Deck	1	*see* 1.3
$t = \frac{s}{J} + 2{,}0$ or $t = 0{,}0042s\sqrt{h_{T1}k}$ whichever is the greater (*see* Note 1)	Sheerstrake and gunwale	2	$t = \frac{0{,}00085s}{1+\left(\frac{s}{S}\right)^2}(0{,}083L_1 + 10)\sqrt{\frac{F_D}{k_L}}$ (*see* Note 6) or $t = 0{,}0042s\sqrt{h_{T1}k}$ whichever is the greater (*see* Note 1)
$t = 0{,}001s\,(0{,}059L_1 + 7)\sqrt{\frac{F_D}{k_L}}$ (*see* Notes 6 & 7) or $t = 0{,}0042s\sqrt{h_{T1}k}$ whichever is the greater (*see* Note 1)	Side shell above mid-depth	3	$t = \frac{0{,}00085s}{1+\left(\frac{s}{S}\right)^2}(0{,}083L_1 + 10)\sqrt{\frac{F_D}{k_L}}$ (*see* Notes 6 & 7) or $t = 0{,}0042s\sqrt{h_{T1}k}$ whichever is the greater (*see* Note 1)
		4	$t = 0{,}001s\,(0{,}059L_1 + 7)\sqrt{\frac{F_M}{k_L}}$ (*see* Notes 6 & 7) or $t = 0{,}0051s\sqrt{h_{T1}k}$ whichever is the greater (*see* Note 1)
$t = 0{,}001s\,(0{,}059L_1 + 7)\sqrt{\frac{F_B}{k_L}}$ (*see* Notes 6 & 7) But not less than: (a) $t = 0{,}0042s\sqrt{h_{T1}k}$ at mid-depth (b) $t = 0{,}0054s\sqrt{\frac{h_{T2}k}{2-F_B}}$ at upper turn of bilge (*see* Notes 1 & 2) } Intermediate thickness by interpolation	Side shell below mid-depth	5	
		6	$t = \frac{0{,}00085s}{1+\left(\frac{s}{S}\right)^2}(0{,}083L_1 + 10)\sqrt{\frac{F_B}{k_L}}$ (*see* Notes 2, 6 & 7) or $t = 0{,}0056s\sqrt{\frac{h_{T2}k}{1{,}8-F_B}}$ whichever is the greater (*see* Note 1)
$t = \frac{s}{J} + 2{,}0$ or $t = 0{,}0052s\sqrt{\frac{h_{T2}k}{1{,}8-F_B}}$ mm whichever is the greater (*see* Note 1)	Bilge (*see* Note 4)	7	$t = \frac{0{,}00085s}{1+\left(\frac{s}{S}\right)^2}(0{,}083L_1 + 10)\sqrt{\frac{F_B}{k_L}}$ (*see* Notes 6 & 7) or $t = 0{,}0063s\sqrt{\frac{h_{T2}k}{1{,}8-F_B}}$ mm whichever is the greater (*see* Note 1)
	Bottom shell	8	*see* 1.3
As for item 8, +2 mm, but need not exceed $25\sqrt{k}$ mm	Keel	9	

NOTES
1. The thickness is also to satisfy the buckling requirements of Pt 3, Ch 4,7.
2. The thickness of side shell plating need not exceed that which would be required for the bottom shell using the spacing of the side shell longitudinals.
3. In no case is the plating thickness to be less than the cargo tank minimum value given in Section 10, or the basic shell end thickness for taper given in Pt 3, Ch 5 and Ch 6.
4. *See also* 4.6.2 concerning plating thickness where longitudinal framing is fitted at bottom and side, but omitted in way of bilge.
5. Keel thickness is in no case to be less than that of the adjacent bottom shell plating.
6. Where separate maximum sagging and hogging still water bending moments are assigned, F_D may be based on the sagging moment and F_B on the hogging moment.
7. Outside the Rule minimum region of higher tensile steel as defined in Pt 3, Ch 3,2.6.1 the value of k_L may be taken as 1,0.

4.2 Symbols

4.2.1 The symbols used in this Section are defined as follows:

F_D, F_B = as defined in Pt 3, Ch 4,5.6

F_M = the greater of F_D or F_B

$$J = 1720{,}5\sqrt{\frac{1-\frac{1}{\alpha}}{\sigma_o}} \quad \text{for } \alpha \le 2$$

$$\left(J = 549{,}3\sqrt{\frac{1-\frac{1}{\alpha}}{\sigma_o}} \quad \text{for } \alpha \le 2\right)$$

$$J = 860{,}7\sqrt{\frac{\alpha}{\sigma_o}} \quad \text{for } \alpha > 2$$

$$\left(J = 274{,}8\sqrt{\frac{\alpha}{\sigma_o}} \quad \text{for } \alpha > 2\right)$$

s = spacing, in mm, of longitudinals or transverse frames. Except where indicated in the text, s is not to be taken less than:

$$470 + \frac{L}{0{,}6} \text{ mm}$$

or 700 mm whichever is the lesser

For limitations in end regions, *see* Pt 3, Ch 5,3 and Ch 6,3

C_w = a wave head, in metres

= $7{,}71 \times 10^{-2} L e^{-0{,}0044L}$

where

e = base of natural logarithms 2,7183

R_B = bilge radius, in mm, as defined in Table 1.5.2 in Chapter 1

S = overall span of frame, in mm, measured between deck and bottom support points or to, or between, stringers, where fitted

T_1 = T but to be taken not less than 0,05L m

$$\alpha = \frac{\sigma_o}{\sigma_c}$$

σ_c = maximum compressive hull vertical bending stress, in N/mm^2 (kgf/mm^2) given by σ_D and σ_B as defined in Pt 3, Ch 4,5.6.1 as appropriate

For ships of normal design, not exceeding 90 m in length, the value of maximum compressive hull vertical bending stress may be determined as follows:

at strength deck

$$\sigma_D = 654LB\frac{Z_{min}}{Z_D}\sigma \times 10^{-6} \text{ N/mm}^2 \text{ (kgf/mm}^2\text{)}$$

at keel

$$\sigma_B = 654LB\frac{Z_{min}}{Z_D}\sigma \times 10^{-6} \text{ N/mm}^2 \text{ (kgf/mm}^2\text{)}$$

where Z_{min}, Z_D, Z_B and σ are in accordance with Pt 3, Ch 4,5.

σ_o = specified minimum yield stress, in N/mm^2 (kgf/mm^2)

h_{T1} = $T + C_w$ m but need not be taken greater than 1,36T

h_{T2} = $T + 0{,}5C_w$ m but need not be taken greater than 1,2T

For longitudinally framed bottom and bilge plating T is to be taken as T_1

4.2.2 Other symbols are defined in 1.6.

4.3 Deck plating

4.3.1 The midship thickness of deck plating is to be maintained for 0,4L amidships and tapered outside this region in association with the deck longitudinals in accordance with 5.5. The midship thickness may, however, be required over an increased extent if it is shown to be necessary by the bending moment curves. Where partial filling of the tanks is contemplated the deck plating is also to comply with the requirements of 6.1.2.

4.3.2 For ships not exceeding 200 m in length, the deck thickness outside 0,4L amidships is to be not less than $\frac{s}{80}$ at any point within the cargo tank region. For lengths of 250 m and over, the thickness is to be not less than $\frac{s}{70}$

Intermediate values are to be obtained by interpolation. For the purpose of this paragraph, the minimum value of s given in 4.2.1 is not to be applied.

4.3.3 The plating thickness outside 0,4L amidships is to be not less than:

$$t = \frac{s}{J} + 2{,}0 \text{ mm}$$

where J is defined in 4.2.1, using σ_o of the plating at the location under consideration.

4.4 Sheerstrake

4.4.1 The midship sheerstrake thickness is to be maintained for 0,4L amidships and tapered outside this region as provided for in Pt 3, Ch 5 and Ch 6. In the taper region, however, the sheerstrake thickness need not exceed the adjacent deck or shell thickness, whichever is the greater.

4.4.2 The width of sheerstrake for 0,4L amidships is to be not less than that required by Table 2.2.1 in Pt 3, Ch 2.

4.4.3 Where a rounded sheerstrake is incorporated, the radius is not, in general, to be less than 15 times the thickness. The radius is to be made by careful cold rolling or bending.

4.5 Shell plating

4.5.1 The midship thicknesses of side and bottom shell plating are to be maintained for 0,4L amidships and tapered outside this region as provided for in Pt 3, Ch 5 and Ch 6. The midship thicknesses may be required over an increased extent if it is shown to be necessary by the bending moment or shear force curves.

4.5.2 The requirements of Pt 3, Ch 5 are to be complied with in respect of the thickness of bottom shell forward.

4.6 Bilge plating

4.6.1 The midship thickness of the bilge plating is to be maintained for 0,4*L* amidships and tapered outside this region as provided for in Pt 3, Ch 5 and Ch 6.

4.6.2 Where longitudinal bottom and side framing is adopted, but longitudinals are omitted between the upper and lower extremities of the bilge radius, the bilge thickness is to be not less than $\frac{R_B F_B}{165 k_L}$ in addition to the required minimum thickness derived from Table 9.4.1. The spacing of transverse supports associated with such an arrangement is to comply with the requirements of 5.4.

4.6.3 Where bilge longitudinals are omitted, the plating thickness outside 0,4*L* amidships will be considered in relation to the support derived from the hull form and internal stiffening arrangements. Due regard will be taken of the possibility of increased loading in the forward region.

4.7 Keel

4.7.1 The midship keel thickness is to be maintained throughout the cargo tank region, except as required by Table 9.4.1, Note 5.

4.7.2 The width of the keel over the cargo tank region is to be not less than:

70*B* mm but need not exceed 1800 mm and is to be not less than 750 mm.

4.8 Taper of higher tensile steel

4.8.1 Where higher tensile steel is used amidships and mild steel at the ends, the thickness of bottom shell, bilge and sheerstrake is to be tapered as provided for in Pt 3, Ch 3, Ch 5 and Ch 6.

4.8.2 Higher tensile steel deck plating is to be tapered in association with attached longitudinals as provided for in 5.5.

4.9 Thicknesses at ends of erections

4.9.1 The deck plating thickness at the poop front is to extend into the poop for a distance at least equal to one-third of the breadth, *B*.

4.9.2 If the poop front extends to within 0,25*L* of amidships, the sheerstrake and the stringer plate at the break are to be increased by 20 per cent. No increase is required if the poop front is 0,3*L* from amidships or greater. The increase at intermediate lengths is to be obtained by interpolation and is to be applied to the tapered thickness of the sheerstrake and stringer plate.

4.9.3 Where the poop extends to within 0,3*L* of amidships and the enclosed machinery opening extends to within $\frac{B}{3}$ of the poop front and has a width exceeding one-half of the breadth of the ship at the poop front, the thickness of deck plating may require to be increased. The forward corners of the casing opening are to be well rounded.

4.10 Deck openings

4.10.1 Openings in the deck are to be kept to the minimum number consistent with operational requirements.

4.10.2 Plate panels in which openings are cut are to be adequately stiffened, where necessary, against compression and shear buckling.

4.10.3 The corners of all openings are to be well rounded, and the edges smooth.

4.10.4 Where the stress concentration factor in way of the opening exceeds 2,4, edge reinforcement is generally to be fitted. This is normally to be in the form of a spigot of adequate dimensions, but alternative arrangements will be considered.

4.10.5 Alternatively, the shape of the opening is to be such that a stress concentration factor of 2,4 is not exceeded.

4.10.6 In this respect, reinforcement will not, in general, be required in way of:

(a) elliptical openings having their major axis fore and aft and ratios of length to breadth not less than 2 to 1, or

(b) openings of other shapes, provided it has been shown by suitable tests that the stress concentration factor does not exceed 2,4.

4.10.7 Circular openings of diameter up to 325 mm will also be accepted, provided that they are situated at such a distance from any other opening that there is an intervening width of plating of not less than five times the diameter of the smaller of the two openings.

4.10.8 Where within 0,4*L* amidships deck openings have a total breadth or shadow area breadth in one transverse section that exceeds the limitation given in Pt 3, Ch 3,3.4.4 and 3.4.5, compensation will be required to restore the excess. This is generally to be arranged by increasing the deck plate thickness, but other proposals will be considered.

4.10.9 Where a deck longitudinal is cut in way of an opening, within 0,4*L* amidships, compensation is to be arranged to ensure full continuity of area.

4.10.10 The area of any edge reinforcement which may be required is not to be taken into account in determining the required sectional area of compensation unless such reinforcement is designed to absorb the loadings from cut longitudinals in way of opening.

4.10.11 Increased scantlings and/or compensation may also be required for large openings outside 0,5*L* amidships, or where openings are close to breaks of superstructure or other areas of high stress in any location on the ship.

4.10.12 Where small diameter threaded openings for staging wires are arranged on the upper deck, they are to be located clear of the other openings and similar areas of stress concentration. Care is to be taken to ensure a gradual transition at the thread ends and the edges of the holes are to be smooth. The closing arrangements are to be as required by Section 13.

4.11 Shell openings

4.11.1 Sea inlets in pump rooms situated within 0,4*L* amidships, are, if practicable, to be fitted clear of the bilge radius. All openings are to be arranged so as to minimize discontinuity of transverse frames, longitudinals or bilge keels. Compensation is to be provided for all openings within 0,4*L* amidships and may also be required for openings in the vicinity of the poop front. The compensation should, if possible, take the form of an insert plate rather than a doubler.

4.11.2 If openings are not circular or oval, the corners are to be rounded with as large a radius as practicable.

4.12 Superstructures

4.12.1 The thickness of plating forming the deck and sides of forecastles and poops is to be as required by Pt 3, Ch 5, Ch 6 and Ch 8.

■ *Section 5* Hull framing

5.1 General

5.1.1 In the cargo tank region, the scantlings of deck, bottom and side longitudinals, and of transverse side framing, where fitted, are to be in accordance with the requirements of this Section.

5.1.2 Longitudinal and transverse framing members outside the cargo tank region are to comply with the requirements of Pt 3, Ch 5,4, Ch 6,4, and Ch 7, as appropriate to their location.

5.1.3 Outside the cargo tank region the structure is to be scarfed into the end structure as provided for in Pt 3, Ch 5, Ch 6 and Ch 7.

5.2 Symbols

5.2.1 The symbols used in this Section are defined as follows:

b_f = the width of the face plate, in mm, of the side longitudinal under consideration, *see* Fig. 9.5.1

b_{f1} = the minimum distance, in mm, from the edge of the face plate of the side longitudinal under consideration to the centre of the web plate, *see* Fig. 9.5.1

b_1 = the value as defined in Table 9.5.3

c_1 = $\dfrac{60}{225 - 165F_D}$ at deck

= 1,0 at $\dfrac{D}{2}$

= $\dfrac{75}{225 - 150F_B}$ at base line of ship

intermediate values of c_1 by interpolation

c_2 = $\dfrac{165}{345 - 180F_D}$ at deck

= 1,0 at $\dfrac{D}{2}$

= $\dfrac{165}{345 - 180F_B}$ at base line of ship

intermediate values of c_2 by interpolation

d_w = depth of web, in mm

h = distance of longitudinal below deck at side, in metres. For deck longitudinals, $h = 0$

h_0 = the distance, in metres, from the mid-point of span of the stiffener to the highest point of tank, excluding hatchway

h_1 = $\left(h_0 + \dfrac{D_1}{8}\right)$, but in no case to be taken less than $\dfrac{L_1}{56}$ m or $(0{,}01L_1 + 0{,}7)$ m, whichever is the greater, and need not be taken greater than $\left(0{,}75D + \dfrac{D_1}{8}\right)$, for bottom longitudinals

h_2 = distance, in metres, from mid-point of span of transverse side frame to deck at side measured at mid-length of tank, but to be taken not less than 2,5 m

h_3 = $h_0 + Rb_1$, but need not be taken greater than $(0{,}75D + Rb_1)$ for bottom longitudinals

l_e = effective length, in metres, of longitudinals measured between span points, but to be taken not less than 1,5 m in double bottom and 2,5 m elsewhere. For determination of span points, *see* Pt 3, Ch 3,3.

t_f = thickness of flange, in mm

t_s = thickness of the bilge shell plating, in mm

t_w = thickness of web, in mm

D_1 = D, in metres, but is to be taken not less than 10 and need not be taken greater than 16

F_B = as defined in Pt 3, Ch 4,5.6

F_D = as defined in Pt 3, Ch 4,5.6

F_1 = a factor determined from Table 9.5.1

F_2 = a factor determined from Table 9.5.2

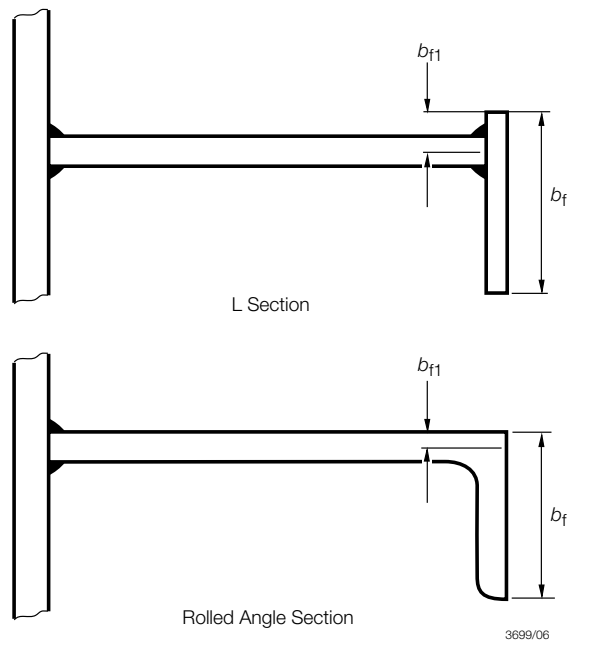

Fig. 9.5.1 Definition of b_f and b_{f1}

R = $\sin\theta$
where θ is the roll angle, in degrees
and $\sin\theta = \left(0{,}45 + 0{,}1\,\frac{L}{B}\right)\left(0{,}54 - \frac{L}{1270}\right)$

R_B = bilge radius, in mm, as defined in Table 1.5.2 in Chapter 1.

5.2.2 Other symbols are defined in 1.6.

Table 9.5.1 Values of F_1

Item	F_1
Deck longitudinals and side longitudinals above $\frac{D}{2}$	$\frac{Dc_1}{4D + 20h}$
Side longitudinals and bottom longitudinals below $\frac{D}{2}$	$\frac{Dc_1}{25D - 20h}$
NOTE Minimum F_1 = 0,12	

Table 9.5.2 Values of F_2

Item	F_2
Deck longitudinals and side longitudinals above $\frac{D}{2}$	$\frac{Dc_2}{D + 2{,}18h}$
Side longitudinals and bottom longitudinals below $\frac{D}{2}$	$\frac{Dc_2}{3{,}18D - 2{,}18h}$
NOTE Minimum F_2 = 0,73	

Table 9.5.3 Determination of b_1

Item No.	Structural arrangement	Location	Value of b_1, metres
1	Where wing and double bottom ballast tanks port and starboard are interconnected	(a) Bottom longitudinals	The greater horizontal distance from ship side to the longitudinal
		(b) Side longitudinals	Breadth of ship
		(c) Deck longitudinals	(i) In way of cargo tanks and inboard ballast tanks, the greater horizontal distance from tank corner at top of tank to longitudinal, either side (ii) In way of wing ballast tanks, the greater horizontal distance from ship side to longitudinal, either side
2	Where wing ballast tanks port and starboard are separate	(a) Bottom longitudinals	The horizontal distance from ship side to longitudinal
		(b) Side longitudinals	Width of wing ballast tank

5.3 Deck, side and bottom longitudinals

5.3.1 The modulus of longitudinals within the cargo tank region, except as provided for in 5.3.2 and 5.5 is to be not less than the greater of the following:

(a) $Z = 0{,}056skh_1\, l_e^2 F_1 F_s$ cm^3, or

(b) $Z = 0{,}0051skh_3\, l_e^2 F_2$ cm^3

where F_1 and F_2 values are as given in Tables 9.5.1 and 9.5.2 and F_s is a fatigue factor to be taken as follows:

$$F_s = \frac{1{,}1}{k}\left[1 - \frac{2b_{f1}}{b_f}(1-k)\right] \text{ at } 0{,}6D \text{ above the base line}$$

$$= 1{,}0 \text{ at upper deck at side and at the base line, intermediate values by linear interpolation}$$

For flat bars and bulb plates $\frac{b_{f1}}{b_f}$ may be taken as 0,5

The modulus of side longitudinals need not exceed that of a bottom longitudinal having the same spacing and configuration.

5.3.2 The modulus of bottom longitudinals is to satisfy the requirements of 5.3.1 or Table 1.6.1(3) in Chapter 1, whichever is the greater.

5.3.3 The section modulus given is that of the longitudinal and associated plating, for the extent of the associated plating, *see* Pt 3, Ch 3,3.2.3. The webs and flanges are to comply with the minimum thickness requirements of Section 10.

5.3.4 Where the spacing of transverses exceeds 5,5 m, the scantlings of side and bottom longitudinals in way of bulkheads and primary members, including end connections, are to be verified by direct calculation.

5.3.5 The side and bottom longitudinal scantlings derived from 5.3.1 and 5.3.2, using the midship thickness of plating, are to extend throughout the cargo tanks. Where the shell plating is inclined at an angle to the horizontal longitudinal axis of greater than 10°, the span of the longitudinals is to be measured along the member. Where the shell plating is inclined at an angle to the vertical axis of greater than 10°, the spacing of longitudinals is to be measured along the chord between members. Where the angle of attachment of side longitudinals clear of amidships varies by 20° or more from a line normal to the plane of the shell, the properties of the section are to be determined about an axis parallel to the attached plating. Angles of slope greater than 40° are to be avoided.

5.3.6 Fabricated longitudinals having the face plate welded to the underside of the web, leaving the edge of the web exposed, are not recommended for shell, inner hull or longitudinal bulkhead longitudinals. Where it is proposed to fit such sections, a symmetrical arrangement of connection to transverse members is to be incorporated. This can be achieved by fitting backing brackets on the opposite side of the transverse web or bulkhead. The primary member web stiffener and backing bracket are to be lapped to the longitudinal. Recommended examples of such backing structure can be seen in the *ShipRight FDA Procedure, Structural Detail Design Guide* (SDDG).

5.3.7 Where partial filling of the tanks is also contemplated the deck longitudinals are to comply with the requirements of 6.1.2.

5.3.8 Stiffeners and brackets on vertical webs in wing ballast tanks, where fitted on one side and connected to higher tensile steel longitudinals between the base line and 0,8*D* above the base line, are to have their heels well radiused to reduce stress concentrations. Where a symmetrical arrangement is fitted, i.e. bracket or stiffening on both sides, and they are connected to higher tensile steel longitudinals, the toes of the stiffeners or brackets are to be well radiused. Alternative arrangements will be considered if supported by appropriate fatigue life assessment calculations.

5.3.9 Where higher tensile steel side longitudinals pass through transverse bulkheads in the cargo area, well radiused brackets of the same material are to be fitted on both the fore and after side of the connection between the upper turn of bilge and 0,8*D* above the base line. Particular attention should be given to ensuring the alignment of these brackets. Alternative arrangements will be considered if supported by appropriate fatigue life assessment calculations.

5.4 Bilge longitudinals and brackets

5.4.1 The scantlings of bilge longitudinals are to be graduated between those required for the bottom and lowest side longitudinals.

5.4.2 Where bilge longitudinals are omitted, the spacing of transverses or equivalent bilge brackets must not exceed:

$$8 \times 10^6 \frac{t_s^2}{DR_B}\sqrt{\frac{t_s}{R_B}} \quad \text{mm}$$

Where no intermediate brackets are fitted between transverses, the spacing between the two outermost bottom longitudinals and between the two lowest side longitudinals is not to exceed one-third of the bilge radius or 40 times the local shell thickness, whichever is the greater.

5.4.3 Attention is drawn to 4.6.2 and 4.6.3 concerning bilge plating thickness where longitudinals are omitted.

5.5 Deck longitudinals outside 0,4*L* amidships

5.5.1 Within the cargo tank region, deck longitudinals may be gradually tapered outside 0,4*L* amidships in association with the deck plating, on the basis of area and modulus. For the requirements, *see* Pt 3, Ch 3,2.5 and Table 3.2.1, *see also* 5.3.5.

5.5.2 The midship spacing of longitudinals is, in general, to be maintained throughout the cargo tank region. The plating thickness and longitudinal depth and thickness are not to be increased at any point in the direction of the taper of area towards the ends of the ship, other than as may be required for compensation for openings. Changes of longitudinal section are, in general, to be avoided.

5.5.3 Attention is also drawn to 5.3.3, which is to be complied with, where necessary, by maintaining a constant deck plating thickness in way of the ends of the cargo tank region.

5.5.4 Where the spacing of transverses in cargo tanks is not constant and variations in longitudinal scantlings are contemplated to suit differing spans, individual consideration will be given to the taper arrangements.

5.6 Stability of longitudinals

5.6.1 The lateral and torsional stability of longitudinals together with web and flange buckling criteria are to be verified in accordance with Pt 3, Ch 4,7.

5.6.2 In addition, the following requirements are to be satisfied:

(a) Flat bar longitudinal

(i) when continuous at bulkheads

$$\frac{d_w}{t_w} \leq 18\sqrt{k_L}$$

(ii) when non-continuous at bulkheads

$$\frac{d_w}{t_w} \leq 15\sqrt{k_L}$$

(b) Built sections

(i) $\frac{d_w}{t_w} \leq 60\sqrt{k_L}$

(ii) $\frac{b_f}{t_f} \leq 15$ for asymmetric sections

(iii) $\frac{b_f}{t_f} \leq 30$ for symmetric sections

5.7 Connections of longitudinals

5.7.1 Connections of longitudinals to bulkheads are to provide adequate fixity and continuity of longitudinal strength. *See also* the *ShipRight FDA Procedure, Structural Detail Design Guide* (SDDG), for recommended design details in critical areas.

5.7.2 Where the length of the ship exceeds 150 m, the longitudinals within 0,1*D* of the bottom and deck are to be continuous through the transverse bulkheads. Higher tensile steel longitudinals are to be continuous irrespective of ship length. Alternative arrangements will be individually considered.

5.7.3 Longitudinals are to be connected to transverse primary members as required by Pt 3, Ch 10,5.2.

5.8 Openings in longitudinals

5.8.1 In general, closely spaced scallops are not permitted in longitudinals within the range of cargo tanks except in way of ballast pipe suctions, reinforcement in these areas will be specially considered.

5.8.2 Small air and drain holes, cut-outs at erection butts and similar widely spaced openings are, in general, to be not less than 200 mm clear of the toes of end brackets, intersections with primary supporting members and other areas of high stress. All openings are to be well rounded with smooth edges.

5.8.3 Drain holes in higher tensile steel longitudinals attached to higher tensile steel plating are to be elliptical in shape or of equivalent design to minimize stress concentrations. The opening is generally to be located clear of the welded connection to the plating, but where a flush opening is essential for drainage the weld connection is to end in a soft toe.

5.8.4 Small circular air holes may be arranged in higher tensile steel deck longitudinals.

5.8.5 Isolated openings spaced greater than 1 metre apart need not be taken into account in calculating the section modulus of the longitudinal, provided that the depth does not exceed 10 per cent of the web depth, or 75 mm, whichever is the greater, but in no case more than 25 per cent of the depth of the longitudinal.

5.8.6 Where the depths given in 5.8.5 are exceeded, the arrangements are to be such as will minimize resultant stress concentration.

5.9 Transverse side frames

5.9.1 For limits of application of transverse side framing, *see* 1.3.

5.9.2 The section modulus of transverse side frames is to be not less than:

$Z = 0{,}01025k\, s\, h_2\, l_e^2$ cm^3, where side webs are fitted;

or

$Z = 0{,}012k\, s\, h_2\, l_e^2$ cm^3, where side webs are not fitted.

5.9.3 The size of the frame is to be governed by the maximum modulus derived from the appropriate formula in 5.9.2, and is to be maintained for the full depth of the ship.

5.9.4 The section modulus given is that of the frame and associated side shell plating. The frame is to comply with the minimum thickness requirements of Section 10.

5.9.5 The inertia of transverse side frames is to be not less than:

In the forward 0,15*L*: $I = 3{,}5 l_e Z$ cm^4

Elsewhere: $I = 3{,}2 l_e Z$ cm^4

Section 6
Inner hull, inner bottom and longitudinal oiltight bulkheads

6.1 General

6.1.1 The inner hull, inner bottom and longitudinal bulkheads are generally to be longitudinally framed. Longitudinal bulkheads may be plane or horizontally corrugated. Centreline longitudinal bulkheads may also be vertically corrugated, *see* 1.3.13. Scantlings of inner hull and longitudinal oiltight bulkheads are to be in accordance with Table 9.6.1 and panel stability is also to be confirmed from primary structure direct calculations. The calculation is to take account of the shear stress and direct stresses derived from both the transverse and longitudinal strength investigations.

6.1.2 Where tanks are intended to be partially filled, the scantlings and structural arrangements of the boundary bulkheads are to be capable of withstanding the loads imposed by the movement of liquid in the tanks. The magnitude of the predicted loadings, together with the scantling calculations, may require to be submitted.

6.2 Symbols

6.2.1 The symbols used in this Section are defined as follows:

b_1 = the greater horizontal distance in metres, from a point one third of the height of the strake above its lower edge or mid-point of the stiffener span, to the corners at the top of the tank on either side.

Where the angle α is less than $\left(32{,}5 - \frac{L}{20}\right)$ degrees, the distance is measured to the widest point of the tank, *see* Fig. 9.6.1.

α = angle, in degrees, as indicated in Fig. 9.6.1.

$c_1 = \dfrac{60}{225 - 165F_D}$ at deck

$= 1{,}0$ at $\dfrac{D}{2}$

$= \dfrac{75}{225 - 150F_B}$ at base line of ship

intermediate values of c_1 by interpolation

$c_2 = \dfrac{165}{345 - 180F_D}$ at deck

Table 9.6.1 Inner hull and longitudinal oiltight bulkhead scantlings

Item	Horizontally stiffened/Vertically stiffened
(1) Plating thicknesses including corrugations (mm) (*See* Notes 1 and 7)	(a) Within 0,1*D* of the deck: $t = t_0$ (b) Within 0,1*D* of the bottom shell: $t = \dfrac{t_0}{\sqrt{2 - F_B}}$ (but not less than t_1) (c) Elsewhere: $t = t_1$ (*see* Note 6) (d) But not less than $t = 0{,}0009s\,(0{,}059L_1 + 7)$
(2) Stiffener modulus (cm^3) (*See* Notes 3 and 4)	(a) Horizontally stiffened: (i) $Z = 0{,}056k\,h_2\,s\,l_e^2\,F_1$ (ii) $Z = 0{,}0051k\,h_4\,s\,l_e^2\,F_2$ whichever is the greater (b) Vertically stiffened: $Z = 0{,}0067ks\,l_e^2 h_5$
(3) Corrugation properties (*See* Note 7)	(a) Modulus (cm^3): $Z = 0{,}0085p\,h_5\,l_e^2\,k$ (b) Inertia (cm^4): $I = 0{,}032p\,h_5\,l_e^3$

NOTES
1. The plating thicknesses are not to be less than as necessary to comply with the buckling requirements of Pt 3, Ch 4,7.
2. The section modulus given by the formula is that of the stiffener and associated plating or of the corrugation over pitch, *p*.
3. For vertical stiffeners, the ratio of web depth to web thickness is not to exceed 60 $\sqrt{k}$ for stiffeners with flanges or face plates, and 18 $\sqrt{k}$ for flat bars. Horizontal stiffeners are to comply with 5.6.
4. The minimum thickness criteria given in Section 10 are also to be complied with and the stiffener web thickness is to be sufficient to withstand the imposed shear forces.
5. The minimum moment of inertia represented by item 3(b) of the Table is not to be reduced on account of higher tensile steel being incorporated.
6. In applying item 1(c) of the Table, it is necessary to calculate values of t_0 for plate panels within 0,4*D* each side of mid-depth, take the minimum value, t_m, and then determine value of t_1.
7. For vertically corrugated centreline longitudinal bulkheads *see also* Table 1.9.2 in Chapter 1 for deep tanks.

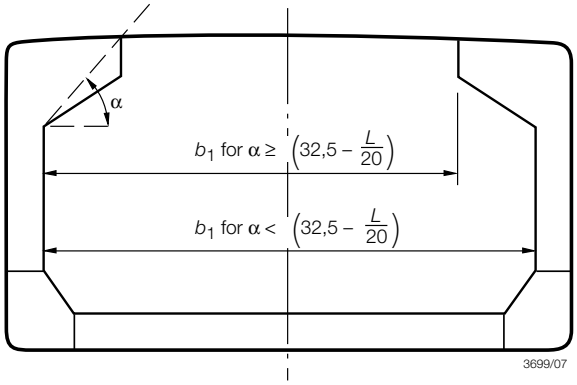

Fig. 9.6.1 Illustration of b_1 determination

$= 1{,}0$ at $\frac{D}{2}$

$= \frac{165}{345 - 180F_B}$ at base line of ship

intermediate values of c_2 by interpolation

h = load height, in metres measured vertically as follows:

(a) For bulkhead plating, the distance from a point one third of the height of the plate panel above its lower edge to the highest point of the tank, excluding hatchway

(b) for bulkhead stiffeners or corrugations, the distance from the mid-point of span of the stiffener or corrugation to the highest point of the tank, excluding hatchway

$h_1 = \left(h + \frac{D_1}{8}\right)$, but not less than $0{,}72\,(h + Rb_1)$

$h_2 = \left(h + \frac{D_1}{8}\right)$, in metres, but in no case to be taken less than $\frac{L_1}{56}$ m or $(0{,}01L_1 + 0{,}7)$ m whichever is the greater

h_3 = distance of longitudinal below deck at side, in metres, but is not to be less than 0

$h_4 = h + R\,b_1$

$h_5 = h_2$ but is to be not less than $0{,}55h_4$

l_e = effective length, in metres, of longitudinals measured between span points, but is not to be taken less than 2,5 m. For determination of span points, *see* Pt 3, Ch 3,3

p = pitch of symmetrical corrugations, in mm

s = spacing, in mm, of bulkhead stiffeners for plane bulkheads. In case of symmetrical corrugations, s is to be taken as b or c in Fig. 3.3.1 in Pt 3, Ch 3, whichever is the greater

$t_0 = 0{,}005s\sqrt{kh_1}$

$t_1 = t_0\left(0{,}84 + 0{,}16\left(\frac{t_m}{t_0}\right)^2\right)$

t_m = minimum value of t_0 within $0{,}4D$ each side of mid-depth of bulkhead

D_1 = D, in metres, but is to be taken not less than 10 and need not be taken greater than 16

F_B = as defined in Pt 3, Ch 4,5.6

F_D = as defined in Pt 3, Ch 4,5.6

F_1 = a factor determined from Table 9.6.2

F_2 = a factor determined from Table 9.6.3

R = $\sin\theta$

where θ is the roll angle, in degrees

and $\sin\theta = \left(0{,}45 + 0{,}1\frac{L}{B}\right)\left(0{,}54 - \frac{L}{1270}\right)$.

6.2.2 Other symbols are defined in 1.6.

Table 9.6.2 Values of F_1

Longitudinal bulkhead longitudinals	F_1
Above $\frac{D}{2}$	$\frac{Dc_1}{4D + 20h_3}$
Below $\frac{D}{2}$	$\frac{Dc_1}{25D - 20h_3}$
NOTE Minimum $F_1 = 0{,}12$	

Table 9.6.3 Values of F_2

Longitudinal bulkhead longitudinals	F_2
Above $\frac{D}{2}$	$\frac{Dc_2}{D + 2{,}18h_3}$
Below $\frac{D}{2}$	$\frac{Dc_2}{3{,}18D - 2{,}18h_3}$
NOTE Minimum $F_2 = 0{,}73$	

6.3 Inner hull and longitudinal bulkheads

6.3.1 Inner hull and longitudinal bulkheads are to extend as far forward and aft as practicable and are to be effectively scarfed into the adjoining structure.

6.3.2 Longitudinal bulkheads only may be perforated provided suitable account is taken of the applied shear forces. Proposals to fit perforated longitudinal bulkheads in cargo tanks will be individually considered. *See also* 7.1 concerning penetration of pump room, cofferdam and cargo tank bulkheads.

6.3.3 The thickness of inner hull and longitudinal bulkhead plating required by Table 9.6.1 is to be maintained throughout the cargo tank length, with the exception of item (1)(a) which may be gradually tapered outside $0{,}4L$ amidships to cargo tank minimum thickness or as required by item (1)(c), whichever is the greater, at $0{,}075L$ from the ends.

6.3.4 The bulkhead plating thicknesses throughout the cargo tank length are to be increased as necessary to attain compliance with the shear strength requirements of Pt 3, Ch 4,6.

6.3.5 For conditions which provide for wing and centre cargo tanks abreast to be filled, with adjacent cargo tanks fore and aft empty, the thickness of longitudinal bulkheads is to comply with the requirements of 8.3.2(d) and (e), *see also* 3.3.6.

6.3.6 Where bulkheads are penetrated by cargo or ballast piping, the structural arrangements in way are to be capable of withstanding the loads imparted to the bulkheads by the hydraulic forces in the pipes. The requirements for cargo and ballast piping is given in Pt 5, Ch 15,2.5 and Ch 15,3.

6.3.7 Openings in horizontal stiffeners are to comply with the requirements of 5.8.

6.4 Longitudinal corrugated bulkheads

6.4.1 Where horizontally corrugated bulkheads are adopted the angle of corrugation is to be not less than 40°.

6.4.2 In ships exceeding 150 m in length the upper and lower strakes of the longitudinal bulkhead are to be plane for a distance of 0,1*D* from the deck and bottom.

6.4.3 Corrugations are to be aligned, and stiffening arrangements on plane members are to be arranged to give adequate support in way of flanges of abutting corrugations. Where both the longitudinal and transverse bulkheads are horizontally corrugated, the arrangements at intersections are to be designed to facilitate attachment and maintain continuity.

6.4.4 Where asymmetrical girders or webs are fitted to corrugated bulkheads, the angle of corrugation is not to exceed 60°.

6.5 Inner bottom

6.5.1 The inner bottom is to be longitudinally framed and the inner bottom plating thickness is to be not less than the greater of:

(a) $t = \dfrac{t_0}{\sqrt{2 - F_B}}$ mm , or

(b) deep tank requirements of Table 1.9.1 in Chapter 1.

6.5.2 The section modulus of inner bottom longitudinals is to be in accordance with Table 9.6.1(2) or deep tank requirements of Table 1.9.1 in Chapter 1, whichever is the greater, and the unsupported span may extend to the spacing between plate floors.

6.5.3 Buckling resistance to longitudinal and transverse stresses in the inner bottom is to be confirmed by direct calculation, *see also* Pt 3, Ch 4,7.

6.5.4 Transverse continuity of inner bottom is to be maintained outboard of inner hull, *see* 6.6.3. Recommended details are shown in the *ShipRight FDA Procedure, Structural Detail Design Guide* (SDDG).

6.5.5 Particular attention is to be given to the through-thickness properties and continuity at the connection of bulkhead stools to the inner bottom. For requirements for plates with specified through thickness properties, *see* Ch 3,8 of the Rules for Materials (Part 2).

6.5.6 Connection of inner bottom longitudinals to plate floor is to satisfy the requirements given in Pt 3, Ch 10,5.2.

6.6 Hopper side tank

6.6.1 Where a hopper side tank is fitted the sloping bulkhead plating and attached longitudinals are to be as required by Table 9.6.1.

6.6.2 A transverse is to be arranged in the hopper tank in line with each double bottom plate floor, to ensure continuity of transverse strength.

6.6.3 Particular attention is to be paid to the continuity of the inner bottom plating into the hopper side tank. Scarfing brackets are to be fitted in the hopper in line with the inner bottom at each transverse. These brackets are to be arranged each side of the transverse.

6.6.4 Knuckles in the hopper tank plating are to be supported by side girders and stringers or by a deep longitudinal.

6.6.5 Detail design guidelines for connections in way of hopper tank knuckles are shown in the *ShipRight FDA Procedure, Structural Detail Design Guide* (SDDG).

6.7 Connections

6.7.1 Horizontal and vertical stiffeners are to be connected to supporting primary members as required by Pt 3, Ch 10,5.2.

6.7.2 Stiffeners are to be bracketed or otherwise efficiently connected at their ends to provide adequate fixity, as required by Pt 3, Ch 10.

6.7.3 Connections of horizontal stiffeners to transverse bulkheads are to provide adequate fixity and continuity of longitudinal strength. Horizontal stiffeners are to be continuous through bulkheads as required by 5.7, for longitudinals.

6.7.4 Where inner hulls, longitudinal and transverse bulkheads are horizontally stiffened, consideration will be given to the stability of the arrangements at intersections. Additional calculations may be required.

■ *Section 7* Transverse oiltight bulkheads

7.1 General

7.1.1 Transverse oiltight bulkheads may be plane or with corrugations arranged horizontally or vertically. Scantlings are to be in accordance with Table 9.7.1, except as otherwise provided for in this Section. The arrangement of stiffening is to be such as will efficiently support loads transmitted by end connections of inner hull, longitudinal bulkhead, shell and deck longitudinals. The thickness of bulkhead plating is also to be confirmed by direct calculation in respect of panel stability. The calculation is to take account of the shear stresses and direct stresses derived from both the transverse and longitudinal strength investigations.

7.1.2 Where tanks are intended to be partially filled, the scantlings and structural arrangements of the boundary bulkheads are to be capable of withstanding the loads imposed by the movement of liquid in the tanks. The magnitude of the predicted loadings, together with the scantling calculations, may require to be submitted.

7.1.3 The scantlings of water ballast tank and cofferdam bulkheads not forming the boundary of a cargo tank are to be as required by Ch 1,9 for deep tanks. Where the bulkheads are boundaries of 'U' shaped tanks, the scantlings are also to be confirmed by the requirements of this Section.

7.1.4 Where the pump room acts as a cofferdam, a bulkhead which does not form part of the boundary of a cargo tank or an oil fuel bunker may be of watertight bulkhead scantlings in accordance with the requirements of Ch 1,9 provided that an inert gas system is fitted in the cargo tanks, and the corresponding notation provided for in Pt 1, Ch 2,2 is assigned.

7.1.5 Where penetration of the cofferdam or pump room bulkheads is permitted by the Rules, the integrity of the bulkhead is to be maintained, *see also* Pt 5, Ch 13,2, Ch 15,3 and Pt 6, Ch 2,13.

7.1.6 Where bulkheads are penetrated by cargo or ballast piping, the structural arrangements in way are to be capable of withstanding the loads imparted to the bulkheads by the hydraulic forces in the pipes.

7.1.7 Special consideration will be given to any proposals to fit permanent repair/maintenance access openings with oiltight covers in cargo tank bulkheads. Attention is drawn to the existence of National Authority Regulations concerning load line and oil outflow aspects of such arrangements.

7.2 Symbols

7.2.1 The symbols used in this Section are defined as follows:

a = the lesser dimension of an unstiffened plate panel, in mm

b = the greater dimension of an unstiffened plate panel, in mm

b_1 = the greater horizontal distance, in metres, from the centre of the plate panel or mid-point of the stiffener span to the corners at the top of the tank on either side

Table 9.7.1 Transverse oiltight bulkhead scantlings

Item	Horizontally stiffened	Vertically stiffened
(1) Plating thickness (mm) (a) Generally, including corrugations (*see also* item 3)	$t = 0{,}0044sf\sqrt{kh_1}$	
(b) But not less than: (i) For the upper 3/4 of the bulkhead (*see* Note 5)	$t = \dfrac{a}{\left(95 + 20\,\dfrac{a}{b}\right)\sqrt{k}}$	$t = \dfrac{a}{\left(85 + 30\left(\dfrac{a}{b}\right)^2\right)\sqrt{k}}$
(ii) For the lower 1/4 of the bulkhead (*see* Note 5)	$t = \dfrac{a}{\left(80 + 20\,\dfrac{a}{b}\right)\sqrt{k}}$	$t = \dfrac{a}{\left(73 + 27\left(\dfrac{a}{b}\right)^2\right)\sqrt{k}}$
(2) Stiffener modulus (cm^3)	$Z = 0{,}0067ksS_1^2\,h_2$	
(3) Corrugation properties (a) Modulus (cm^3)	$Z = 0{,}0085ph_2\,l_e^2k$	
(b) Inertia (cm^4) (*see* Note 4)	$I = 0{,}032ph_2\,l_e^3$	

NOTES
1. The section modulus given by the formula is that of the stiffeners and associated plating or of the corrugation over pitch p.
2. The ratio of web depth to web thickness is not to exceed 60 $\sqrt{k}$ for stiffeners with flanges or face plates and 18 $\sqrt{k}$ for flat bars.
3. The minimum thickness criteria given in Section 10 are also to be complied with, and the stiffener web thickness is to be sufficient to withstand the imposed shear forces.
4. The minimum moment of inertia required by item 3(b) of the Table is not to be reduced on account of higher tensile steel being incorporated.
5. For vertically corrugated bulkheads, *see* Table 1.9.2 in Chapter 1 for deep tanks.

f = $1{,}1 - \dfrac{s}{2500S_1}$ but not to be taken greater than 1,0

h = load height, in metres measured vertically as follows:

(a) for bulkhead plating, the distance from a point one-third of the height of the plate panel above its lower edge to the highest point of the tank, excluding hatchway

(b) for bulkhead stiffeners or corrugations, the distance from the mid-point of span of the stiffener or corrugation to the highest point of the tank, excluding hatchway

h_1 = $h + \dfrac{D_1}{8}$ but not less than $0{,}72\,(h + Rb_1)$

h_2 = $h + \dfrac{D_1}{8}$ but not less than $0{,}55\,(h + Rb_1)$

p = pitch of symmetrical corrugations, in mm

s = spacing, in mm, of bulkhead stiffeners or the breadth, in mm, of flange or web, whichever is the greater, of symmetrical corrugations

D_1 = D, in metres, but is to be taken not less than 10 and need not be taken greater than 16

R = $\sin\theta$

where θ is the roll angle, in degrees

and $\sin\theta = \left(0{,}45 + 0{,}1\,\dfrac{L}{B}\right)\left(0{,}54 - \dfrac{L}{1270}\right)$

S_1 = spacing of primary members, in metres. For the span at top, span may be reduced by the depth of deck longitudinal.

7.2.2 Other symbols are defined in 1.6.

7.3 Corrugated bulkheads

7.3.1 Where corrugated bulkheads are adopted the angle of corrugation is to be not less than 40°, *see* Fig. 3.3.1 in Pt 3, Ch 3.

7.3.2 Where transverse bulkheads are vertically corrugated, adequate resistance to transverse compressive forces is to be provided by horizontal stringers or equivalent.

7.3.3 Where transverse bulkheads are horizontally corrugated, the span of the corrugations should not, in general, exceed 5,0 m. Consideration is to be given to providing an efficient connection between the corrugations and the inner hull and longitudinal bulkhead stiffeners including local reinforcement where necessary.

7.3.4 Corrugations are to be aligned and stiffening arrangements on plane members are to be arranged to give adequate support in way of flanges of abutting corrugations. Where both the longitudinal and transverse bulkheads are horizontally corrugated, the arrangements at intersections are to be designed to facilitate attachment and maintain continuity.

7.3.5 Where asymmetrical girders or webs are fitted to corrugated bulkheads, the angle of corrugation is not to exceed 60°.

7.3.6 Where corrugated bulkheads on stools are adopted, attention is to be paid to the design of end connection. The arrangements are to be in accordance with the requirements of 7.4.

7.3.7 Where vertically corrugated bulkheads are proposed without stools both flanges are to be adequately supported at deck and inner bottom. Proposals will be specially considered. Particular attention is to be given to the through thickness properties of the inner bottom plating and continuity at the connection to the inner bottom. For the requirements for plates with specified through thickness properties, *see* Ch 3,8 of the Rules for Materials (Part 2).

7.4 Bulkheads supported by stools

7.4.1 The scantlings of vertically corrugated and double plate bulkheads supported by stools are generally to be confirmed by direct calculations which are to be submitted.

7.4.2 In addition the scantlings are to be determined in accordance with the requirements of Ch 1,9.2.1 for deep tank bulkheads with the load head h_4, in metres, measured to the highest point of the tank, excluding hatchway, but is not to be taken less than $0{,}44\,(h_4 + Rb_1)$.

7.4.3 The sloping stool plate thickness adjacent to the corrugation is to be not less than the thickness of the corrugation flange at mid span as required by 7.4.1 and 7.4.2. Where the plate thickness is increased locally, the vertical extent is to be not less than the width of the flange of the corrugation.

7.4.4 The stools are to be reinforced with plate diaphragms or deep webs, and in bottom stools the diaphragms are to be aligned with double bottom side girders. Continuity is also to be maintained between the diaphragms and the webs of bulkhead corrugations as far as practicable.

7.4.5 Additional double bottom girders are to be arranged extending at least to the first plate floor adjacent to the bulkhead each side and, in general, are to be spaced not more than 3,8 m apart.

7.4.6 The sloping plate of bottom stools is to be aligned with double bottom floors. Particular attention is to be given to the through thickness properties of the inner bottom plating and continuity at the connection to the inner bottom, and to the through thickness properties of the bottom stool shelf plate. For requirements for plates with specified through thickness properties, *see* Ch 3,8 of the Rules for Materials (Part 2).

7.4.7 An efficient system of reinforcement is to be arranged in line with the tank transverse bulkheads or bulkhead stools at the intersection with the sloped plating of the double bottom hopper tanks and topside tanks. The reinforcement fitted in the tanks is to consist of girders or intercostal bulb plate or equivalent stiffeners fitted between and connected to the sloped bulkhead longitudinals.

7.4.8 The shelf plates of the bulkhead stools are to be arranged to align with the longitudinals in the double bottom hopper tank and topside tanks. Where sloping shelf plates are fitted to stools suitable scarfing is to be arranged in way of the connections of the stools to the adjoining structures.

7.4.9 The arrangement of stools and adjacent structure common with the cargo tank is to be designed to avoid pockets in which gas could collect.

7.5 Connections

7.5.1 Horizontal and vertical stiffeners are to be connected to supporting primary members as required by Pt 3, Ch 10,5.2.

7.5.2 Stiffeners are to be bracketed or otherwise efficiently connected at their ends to provide adequate fixity.

7.5.3 Arrangements and scantlings of end brackets for vertical stiffeners are to be as required by Pt 3, Ch 10.

7.5.4 Horizontal stiffener end brackets are generally to satisfy the requirements of Pt 3, Ch 10. However, the length of the bracket arm at the side shell, inner hull and longitudinal bulkhead longitudinals is, in general, not to exceed the depth of the longitudinal. In order to provide the necessary weld connection, consideration may require to be given to fitting brackets on both sides of the bulkhead or to welding the stiffener to the longitudinal. The arrangements are also to be such as to maintain transverse continuity at intersections. Examples can be seen in the *ShipRight FDA Procedure, Structural Detail Design Guide* (SDDG).

■ *Section 8*
Non-oiltight bulkheads

8.1 General

8.1.1 The requirements of this Section are applicable to longitudinal and transverse wash bulkheads, where fitted. Proposals to fit perforated longitudinal bulkheads in cargo tanks will be individually considered, *see also* 1.3.

8.1.2 Wash bulkheads are generally to be of plane construction, horizontally or vertically stiffened, having an area of perforations not less than 10 per cent of the total area of the bulkhead. The perforations are to be so arranged that the efficiency of the bulkhead as a support is not impaired.

8.1.3 Where tanks are intended to be partially filled, the scantlings and structural arrangements of the wash bulkheads are to be capable of withstanding the loads imposed by the movement of liquid in the tanks. The magnitude of the predicted loads, together with the scantling calculations, may require to be submitted.

8.2 Symbols

8.2.1 The symbols used in this Section are defined as follows:

a = the horizontal length of the plate panel, in mm

a_T = the cross sectional area of the vertical web on longitudinal bulkhead and associated bulkhead plating over one transverse space, in cm^2

b_i = half the distance, in metres, between members supporting floors as shown in Fig. 9.8.1

b_L = half the distance, in metres, between members supporting horizontal girder, adjacent to the bulkhead under consideration, as shown in Fig. 9.8.1

b_T = overall breadth of tank, in metres

D_1 = D, in metres, but is to be taken not less than 10 and need not be taken greater than 16

D_L = the depth of the longitudinal bulkhead, including double bottom girder, in metres

d_L = the distance, in metres, from the top of the longitudinal bulkhead to the centre of the plate panel under consideration and need not be taken greater than the distance to the bracket toe of the double bottom transverse primary member

h = the distance, in metres, from the centre of the load on the horizontal girder to $\frac{D_1}{8}$ m above the highest point of the tank, excluding the hatchway

d_H = the mean depth of horizontal girders at the longitudinal bulkhead, in metres, including the depth of the end brackets as shown in Fig. 9.8.1

l_G = the distance, in metres, from the horizontal girders to the adjacent horizontal primary member below

$$t_3 = \frac{Q_{SL} + Q_{SW}}{D_L \tau} \text{ mm}$$

Q_s, Q_w = as defined in Pt 3, Ch 4,6.1.

$$\tau = \frac{110}{k_L} \text{ N/mm}^2 \quad \left(\frac{11{,}2}{k_L} \text{ kgf/mm}^2\right)$$

Q_{SL} = the maximum still water shear force on the longitudinal bulkhead, in kN (tonne-f), of the loading condition in question.
Where two longitudinal bulkheads are fitted, Q_{SL} may be taken as:
$Q_{SL} = 0{,}34Q_S$
Where one longitudinal bulkhead is fitted, Q_{SL} may be taken as:
$Q_{SL} = 0{,}40Q_S$
Q_{SL} may also be derived by direct calculation to determine the distribution of shear force between the shell, inner hull and longitudinal bulkheads.

Q_{SW} = design wave shear force on the longitudinal bulkhead, in kN (tonne-f).
Where two longitudinal bulkheads are fitted, Q_{SW} may be taken as:
$Q_{SW} = 0{,}20Q_w$
Where one longitudinal bulkhead is fitted, Q_{SW} may be taken as:
$Q_{SW} = 0{,}28Q_w$

l_T = overall length of tank, in metres

$F_d = W_h\, S\, b_i \dfrac{d_L}{D_L}$

l_b = the distance between the transverse bulkheads (oiltight or non-oiltight) adjacent to the bulkhead under consideration, in metres

S = spacing of the double bottom transverse primary members, in metres

T_p = the maximum operating draught of ship, in metres, where the tank with non-oiltight bulkhead is empty.

$W_h = T_p + 0{,}023Le^{-0{,}0044L}$

$\alpha = \dfrac{s}{a}$, but not to be taken greater than 1,0

8.2.2 Other symbols are defined in 1.6.

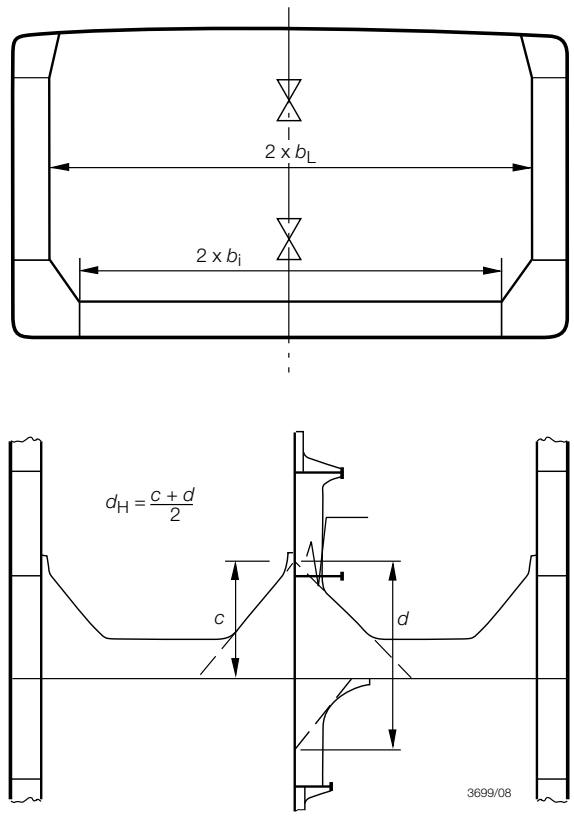

Fig. 9.8.1 Horizontal girder

8.3 Scantlings

8.3.1 The thickness of plating may be the compartment minimum, *see* Section 10, except as given in 8.3.2 and 8.3.4.

8.3.2 Where non-oiltight **longitudinal** wash bulkheads support a bottom primary member, the following additional requirements are to be met:

(a) The area of perforation is to be not greater than 25 per cent of the total area of the bulkhead, and consideration is to be given to the disposition and geometry of the perforations so that the shear rigidity of the bulkhead is a maximum.

(b) The net section area of the bulkhead is to be not less than $0{,}135 l_T\, b_T\, D$ cm^2.

(c) The plating thickness is to comply with Table 9.6.1(1)(d).

(d) The thickness of longitudinal bulkhead plating and web plating of the vertical web on longitudinal bulkhead is generally to be not less than:

$$t = 0{,}026 \frac{s}{1+\alpha^2}\sqrt{\frac{F_d}{a_T}} \text{ mm}$$

(e) The thickness of the longitudinal bulkheads supporting a transverse bulkhead horizontal girder is in general to be not less than:

(i) $t = \dfrac{0{,}0437\, h l_G\, b_L k}{d_H} + \dfrac{0{,}892\, t_3 k}{k_L}$ mm

(ii) $t = 0{,}0011 s\,(0{,}059 L_1 + 7)$ mm

whichever is the greater.

The thickness is also to satisfy the buckling requirements of Pt 3, Ch 4,7.

The increased thickness is to extend over the end bracket and buttress of the horizontal girder down to a distance of $0{,}5 l_G$.

8.3.3 The section modulus of longitudinal wash bulkhead stiffeners is to be not less than, *see also* Pt 3, Ch 4,7:

$$Z = 0{,}0036\left(0{,}54 - \frac{L}{1270}\right) b_T\, k\, s\, S^2 \text{ cm}^3$$

8.3.4 Where non-oiltight **transverse** wash bulkheads support a primary fore and aft bottom centreline girder, the following additional requirements are to be met:

(a) The area of perforation is to be not greater than 25 per cent of the total area of the bulkhead, and consideration is to be given to the disposition and geometry of the perforations so that the shear rigidity of the bulkhead is a maximum.

(b) The net section area of the bulkhead is to be not less than $0{,}135 l_b\, b_T\, D$ cm^2.

(c) The plating thickness is to comply with Table 9.7.1(1)(b). In no case is either panel dimension to exceed 180 times the thickness required by this sub-paragraph or by 8.3.1, whichever is the greater.

8.3.5 The section modulus of transverse wash bulkhead stiffeners is to be not less than:

$$Z = 0{,}1215 k\, s\, l_e^2 \frac{l_b}{L} \text{ cm}^3$$

8.4 Connections

8.4.1 Stiffeners are to be bracketed or otherwise efficiently connected at their ends and to primary supporting members, in accordance with the requirements of Pt 3, Ch 10.

■ *Section 9*
Primary members supporting longitudinal framing

9.1 General

9.1.1 These requirements are applicable to ships having structural arrangements in accordance with 1.3.

9.1.2 The minimum thickness and constructional detail requirements of Section 10 are also to be complied with.

9.1.3 The scantlings of primary members are, in general, to be determined from direct calculations carried out in accordance with the requirements of Section 14 or in accordance with the requirements of this Section or the relevant Sections of Chapter 10. The direct calculations are to be submitted with the plans for confirmatory purposes, *see also* 1.1.9.

9.2 Symbols

9.2.1 The symbols used in this Section are defined as follows:

b_{e1}, b_{e2} = effective end bracket leg length, in metres, at each end of the member, *see* Pt 3, Ch 3,3

d_{DB} = Rule depth of centre girder, in mm

h_c = vertical distance from the centre of the cross-ties to deck at side amidships, in metres

h_s = distance between the lower span point of the vertical web and the moulded deck line at centreline, in metres

l_b = the distance, in metres, between the transverse bulkheads (oiltight or non-oiltight) adjacent to the bulkhead under consideration

l_c = one-half the vertical distance, in metres, between the centres of the adjacent cross-ties or between the centre of the adjacent cross-tie and the centre of the adjacent bottom or deck transverse, or double bottom, *see* Fig. 9.9.1

s = spacing of transverses, in metres

A_c = cross sectional area of the cross-tie material which is continuous over the span of the cross-tie in cm^2

I_c = least moment of inertia of the cross-tie in cm^4

S_c = length of cross-tie, in metres, measured as follows:

(a) For centre tank cross-ties: S_c is the distance between the face plates of the vertical webs on the longitudinal bulkheads.

(b) For wing tank cross-ties: S_c is the distance between the face plate of the vertical web on the longitudinal bulkhead and the inner hull.

S_s = span of the vertical web, in metres, and is to be measured between end span points, *see* Fig. 9.9.1.

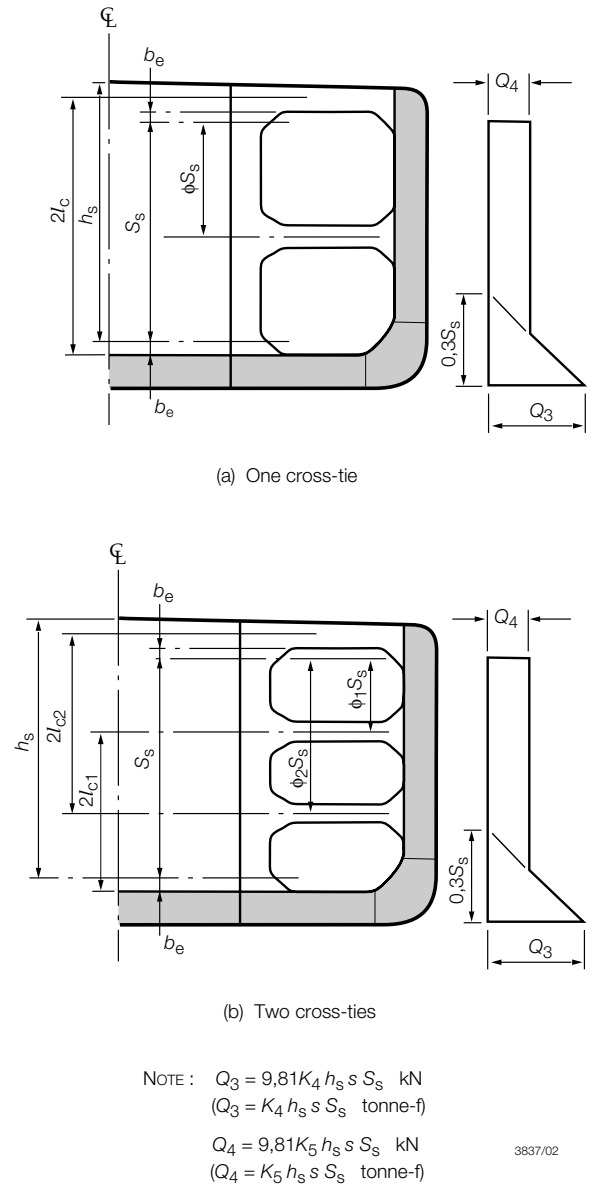

Fig. 9.9.1 Wing tank construction

9.2.2 Other symbols are defined in 1.6.

9.3 Girders and floors in double bottom

9.3.1 Girders are to be arranged at the centreline or duct keel, at the hopper side and in way of longitudinal bulkheads and bulkhead stools. Plate floors are to be arranged in way of transverse bulkheads and bulkhead stools.

9.3.2 In way of vertically corrugated transverse bulkheads supported by stools, additional girders are to be arranged extending at least to the first plate floor adjacent to the bulkhead each side and spaced not more than 3,8 m apart, *see* 7.4.5.

9.3.3 The centre girder is to have a depth of not less than that given by:

$$d_{DB} = 28B + 205\sqrt{T} \text{ mm}$$

The height of the double bottom is also to satisfy the requirements given in 1.3.

9.3.4 Thickness of floors and girders is to be confirmed by means of a direct calculation. Due account is to be taken of access and other openings. The minimum thickness however, is to be not less than that given by:

(a) Centre girder or duct keel:

$$t = (0{,}008d_{DB} + 1{,}0)\sqrt{k} \text{ mm}$$

(b) Floors and side girders:

$$t = (0{,}007d_{DB} + 1{,}0)\sqrt{k} \text{ mm but need not exceed } 12{,}0\sqrt{k} \text{ mm}$$

9.3.5 The scantlings of plating and stiffeners of longitudinal girders are not to be less than necessary to comply with the buckling requirements of Pt 3, Ch 4,7.

9.3.6 Floors and girders forming the boundaries of tanks are also to satisfy the requirements of tank bulkheads given in Ch 1,9.

9.3.7 Provision is to be made for the free passage of air and water from all parts of the tanks to the air pipes and suctions, account being taken of the pumping rates required. Adequate access is also to be provided to all parts of the double bottom. The edges of all openings are to be smooth. The size of the opening should not, in general, exceed 50 per cent of the double bottom depth, unless edge reinforcement is provided. In way of ends of floors and fore and aft girders at transverse bulkheads, the number and size of openings are to be kept to a minimum, and the openings are to be circular or elliptical. Edge stiffening may be required in these positions.

9.3.8 For ships intended to load or unload while aground, *see* Pt 3, Ch 9,13.

9.3.9 The structure of girders and duct keels is to be sufficient to withstand the forces imposed by dry-docking the ship, *see also* 10.10.

9.4 Vertical webs and horizontal girders in wing ballast tanks and hopper spaces

9.4.1 The width of the double skin side structure is to comply with the requirements given in 1.3.

9.4.2 Vertical webs are to be arranged in line with the floors in the double bottom to ensure continuity of transverse strength.

9.4.3 A horizontal girder is to be arranged at the top of the hopper space and is to be located close to the knuckle between the hopper and inner hull. Where additional longitudinal girders are provided to satisfy access requirements in accordance with 13.2.8, these are to be arranged in line with horizontal girders on the transverse bulkhead and wing tank cross-ties where these are fitted.

9.4.4 The scantlings of vertical webs and horizontal girders are to be determined by means of direct calculations and due account is to be taken of openings in the structure, *see also* the buckling requirements in Pt 3, Ch 4,7 for horizontal girders.

9.4.5 Access openings are to be kept clear of other small openings and are to have smooth edges. Edge stiffening is also to be arranged in regions of high shear stress.

9.5 Deck transverses and girders

9.5.1 Deck transverses are to be arranged in line with the vertical webs at the side and vertical transverses at longitudinal bulkheads, where fitted, to ensure continuity of transverse structure.

9.5.2 Deck girders are to be supported at transverse bulkheads by vertical webs or equivalent.

9.5.3 The scantlings of deck transverses and girders are to be determined by means of direct calculations or, alternatively, in accordance with the requirements of Ch 10,2.8 and 2.9.

9.6 Cross-ties

9.6.1 Cross-ties, where fitted, may be of plate or sectional material and are to have an area and least moment of inertia to satisfy the following:

$$A_c \geq \frac{0{,}765\, l_c\, h_c\, sk}{\left(1 - \dfrac{0{,}45S_c}{r\sqrt{k}}\right)} \text{ cm}^2$$

where $r = \sqrt{\dfrac{I_c}{A_c}}$ cm

(As a first approximation the area and inertia of the cross-tie may be calculated in accordance with Ch 10,2.10.1.)

9.6.2 The scantlings of the webs and flanges of cross-ties are also to be confirmed by means of direct calculation.

9.6.3 Design of end connections is to be such that the area of the welding, including vertical brackets, where fitted, is to be not less than the minimum cross-sectional area of the cross-tie derived from 9.6.1. To achieve this, full penetration welding may be required and thickness of brackets may require further consideration. Attention is to be given to the full continuity of area of the backing structure on the vertical webs and within the wing ballast tank. Particular attention is also to be paid to the welding at the toes of all vertical end brackets on the cross-tie.

9.7 Primary members supporting oiltight bulkheads

9.7.1 The scantlings of primary members supporting oiltight bulkheads are, in general, to be determined by means of direct calculation, *see also* 9.7.4 and 9.7.5.

9.7.2 Alternatively, the scantlings of vertical webs and horizontal girders on transverse bulkheads are to be determined in accordance with the requirements of Ch 10,4.

9.7.3 Where longitudinal oiltight bulkheads are fitted, vertical webs are to be arranged in line with the deck transverses and the double bottom floors. Particular attention is to be paid to the alignment of the bulkhead web end brackets with the double bottom floors.

9.7.4 The section modulus of vertical webs on longitudinal bulkheads in ships with one or two longitudinal bulkheads is to be not less than:

$$Z = K_3 s h_s S_s^2 k \quad \text{cm}^3$$

where K_3 is given in Table 9.9.1.

9.7.5 In ships with two longitudinal bulkheads, the net sectional area of the web at any section is not to be less than:

$$A = 0{,}12 Q_x k \quad \text{cm}^2$$

$$\left(A = \frac{Q_x k}{0{,}85} \quad \text{cm}^2\right)$$

where Q_x is calculated from shear force diagrams constructed as shown in Fig. 9.9.1. For this purpose the values of K_4 and K_5 and the range of application are given in Table 9.9.1.

9.7.6 The moment of inertia of vertical webs on longitudinal bulkheads is to be not less than:

$$I = \frac{7{,}5}{k} S_s Z \quad \text{cm}^4$$

9.7.7 Where horizontal girders and vertical webs on transverse bulkheads do not form part of a ring structure, they are to be arranged with substantial end brackets forming a buttress extending to the adjacent vertical web or transverse. The shear and combined stresses in the buttress arrangements are to be examined.

9.7.8 Where the cross-ties are omitted from the transverse ring in the wing or centre tanks adjacent to the transverse bulkhead, the design of the horizontal girder, end buttress and vertical webs is to take account of the loads imposed and the deflection of the structure.

Table 9.9.1 Vertical web on longitudinal bulkhead coefficient

Number of cross-ties	K_3	K_4	K_5	Range of application
1	2,16	$0{,}455 - 0{,}316\phi$	0,103	$0{,}5 \le \phi \le 0{,}7$
2	1,88	$0{,}441 - 0{,}267\phi_1$	$0{,}498\phi_2 - 0{,}249$	$0{,}4 \le \phi_1 \le 0{,}5$ $0{,}65 \le \phi_2 \le 0{,}8$

9.7.9 Where, in ships exceeding 150 m in length, the longitudinal bulkhead is corrugated, the transverses are generally to be symmetrical on both sides of the bulkhead, and the scantlings may require to be increased to limit deflection.

9.8 Primary members supporting non-oiltight bulkheads

9.8.1 These requirements are applicable to primary members supporting non-oiltight transverse bulkheads. Where non-oiltight longitudinal bulkheads are proposed, the requirements for primary members will be individually considered.

9.8.2 Direct calculation procedures will generally be required where non-oiltight bulkhead primary members will interact with, or tend to support, the primary bottom, longitudinal bulkhead or side structure, and in other cases where warranted by structural design features. In general the section modulus of horizontal girders is to be not less than:

$$Z = 145 k\, b\, l_e^2 \frac{l_b}{L} \quad \text{cm}^3$$

9.8.3 When determining the width of plating supported and the effective breadth for calculating the section modulus, no deduction is to be made on account of perforations.

■ *Section 10* Construction details and minimum thickness

10.1 Symbols

10.1.1 The symbols used in this Section are defined as follows:

For the primary member:

- d_w = depth of member web, in mm
- s_t = spacing of tripping or docking brackets on the web of the member, in metres
- t_w = thickness of member web, in mm
- S_w = spacing of members, in metres

For the primary member web stiffener:

- d = depth of web plate panel, in mm
- l_s = span of stiffeners between effective support points, in metres
- s = spacing of stiffeners on the web, in mm
- A_s = cross-sectional area of the web stiffener and associated web plating, in cm^2
- I_s = moment of inertia of the web stiffener and associated web plating, in cm^4

For the primary member end bracket, *see* Fig. 9.10.2:

- d_b = arm length, in metres
- l_b = effective length of the free edge, in metres
- t_b = thickness of the end bracket plating, in mm
- A_b = cross-sectional area of the end bracket edge stiffeners and associated plating, in cm^2
- I_b = moment of inertia of the end bracket edge stiffeners and associated plating, in cm^4

10.1.2 Other symbols are defined in 1.6.

10.2 Compartment minimum thickness

10.2.1 Within the cargo tank region, including wing ballast tanks and cofferdams at the ends of or between cargo tanks, the thickness of primary member webs and face plates, hull envelope and bulkhead plating is to be not less than:

$t = 2{,}15L^{0,3}$ mm, or

$t = 7{,}5$ mm

whichever is the greater.

10.2.2 The minimum thickness of secondary members is to be determined as above, but need not exceed 11,0 mm.

10.2.3 In pump rooms the minima apply to shell, deck, longitudinal bulkhead and associated longitudinals. For other items solely within the pump room, including transverse bulkheads separating the adjacent machinery spaces from the pump room, the minima may be reduced by 1,0 mm, subject to a lower limit of 7,5 mm.

10.2.4 Within the fore peak tank, minimum thicknesses are to be in accordance with 10.2.1 and 10.2.2 reduced by 1,0 mm but are to be not less than 7,5 mm.

10.3 Geometric properties and proportions of members

10.3.1 The depth of the web of any primary member is to be not less than 2,5 times the depth of the cut-outs for the passage of secondary members, except where compensation is arranged to provide satisfactory resistance to deflection and shear buckling in the web.

10.3.2 The area of material in the face plate of any primary member structure is not to exceed:

$0{,}00667 d_w t_w$ cm^2

nor is it to be less than:

$0{,}00417 s_t d_w$ cm^2.

10.3.3 The geometric properties of rolled stiffeners and built sections are to be calculated in association with an effective width of attached plating in accordance with Pt 3, Ch 3,3.

10.4 Continuity of primary members

10.4.1 Primary members are to be so arranged as to ensure effective continuity of strength throughout the range of tank structure. Abrupt changes of depth or section are to be avoided. Where members abut on both sides of a bulkhead or on other members, arrangements are to be made to ensure that they are in alignment.

10.4.2 The members are to have adequate end fixity, lateral support and web stiffening, and the structure is to be arranged to minimize hard spots or other sources of stress concentration. Openings are to have well rounded corners and smooth edges and are to be located having regard to the stress distribution and buckling strength of the plate panel.

10.5 Primary member web plate stiffening

10.5.1 The webs of primary members are to be supported and stiffened in accordance with the following requirements, which are designated as requirements 'A', 'B', 'C', 'D' and 'E'. The application of these requirements is detailed in 10.7, and the corresponding locations indicated in Fig. 9.10.1. Where webs are slotted for the passage of secondary members, the web stiffeners are to be arranged to provide adequate support for the loads transmitted, *see* Pt 3, Ch 10,5.2. Where direct calculations are carried out in accordance with 1.1.9 and Section 14, other stiffening arrangements will be accepted subject to compliance with the maximum permissible stress and plate panel buckling criteria given in the *ShipRight SDA Procedure, Guidance Notes on Direct Calculations: Primary Structure of Tankers*.

10.5.2 Where higher tensile steel is used for the primary members, the maximum spacing of stiffeners given in this Section is to be multiplied by $\sqrt{k}$.

10.5.3 In addition to these stiffeners, tripping brackets as required by 10.11 are also to be fitted.

10.5.4 For requirement 'A' stiffening:

(a) The thickness, t_w of the web is to be not less than $\frac{s}{80}$

(b) Stiffening is generally to be fitted normal to the face plate of the member, but the stiffeners parallel to the face plate will be required when the web depth, d_w, exceeds a value, d_{max} which is to be taken as:

for $s \le 55t_w$ $\quad d_{max} = 3s$

for $s > 55t_w$ $\quad d_{max} = \frac{45s\, t_w}{s - 40t_w}$

(c) Where stiffening parallel to the face plate is required, the distance from the face plate of the member to the nearest stiffener is not to exceed $65t_w$. Further stiffeners are to be fitted at similar spacing so that the distance between the last stiffener and the shell or bulkhead plating does not exceed d_{max}. In way of end brackets to transverse bulkhead primary structure, stiffeners are to be fitted normal to the face plate of the member so that web plate panel dimensions parallel to the face plate do not exceed $80t_w$.

10.5.5 For requirement 'B' stiffening:

(a) The thickness, t_w of the web is to be not less than $\frac{s}{85}$

(b) Stiffening is generally to be fitted normal to the face plate of the member, but stiffeners parallel to the face plate will be required when the web depth, d_w, exceeds a value d_{max}, which is to be taken as:

for $s \le 70t_w$ $\quad d_{max} = 3s$

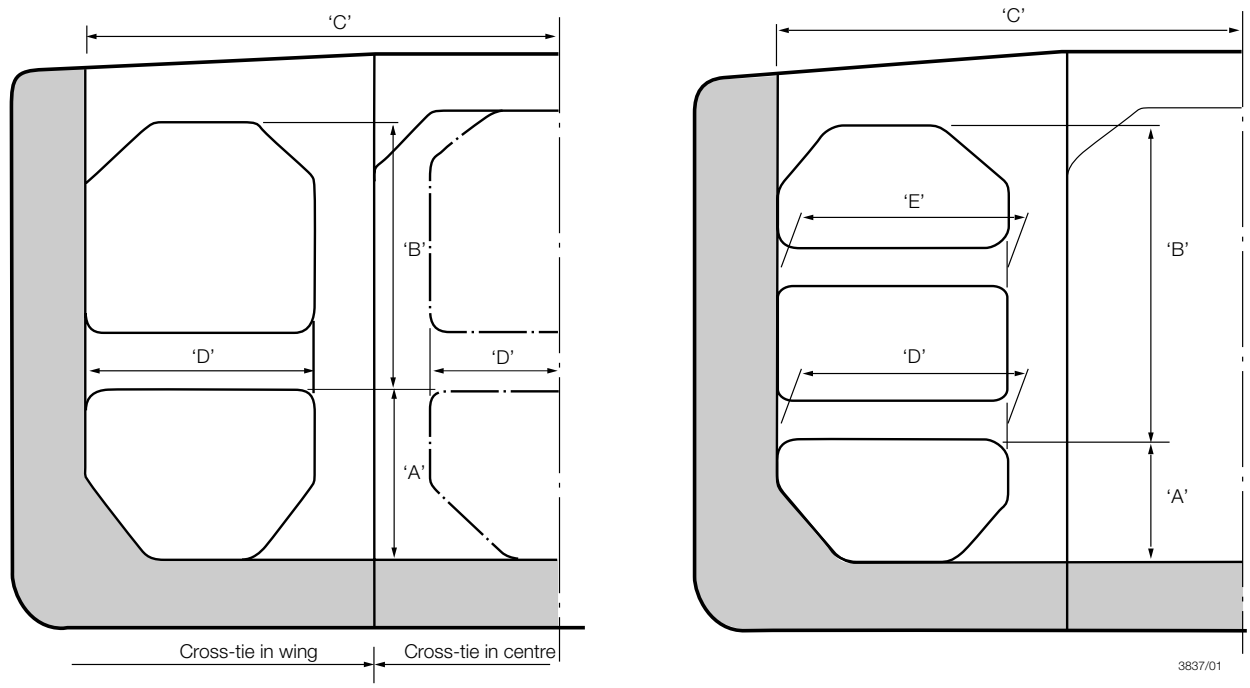

Fig. 9.10.1 Key to application requirements

for $s > 70t_w$ $\quad d_{max} = \dfrac{48s\,t_w}{s - 54t_w}$

(c) Where stiffening parallel to the face plate is required, the distance from the face plate of the member to the nearest stiffener is not to exceed $80t_w$. Further stiffeners are to be fitted at similar spacing so that the distance between the last stiffener and the shell or bulkhead plating does not exceed d_{max}.

10.5.6 For requirement 'C' stiffening:

(a) Stiffening is generally to be fitted normal to the face plate of the member in line with alternate secondary members, but stiffeners parallel to the face plate will be required, when the web depth, d_w exceeds a value, d_{max} which is to be taken as:

for $s \le 76t_w$ $\quad d_{max} = 3s$

for $s > 76t_w$ $\quad d_{max} = \dfrac{48s\,t_w}{s - 60t_w}$

(b) Where stiffening parallel to the face plate is required, the distance from the face plate of the member to the nearest stiffener is not to exceed $90t_w$. Further stiffeners are to be fitted at similar spacing so that the distance between the last stiffener and the deck plating does not exceed d_{max}.

10.5.7 For requirement 'D' stiffening:

(a) Stiffening parallel to the face plate will be required such that the distance between the stiffener and face plate, or between two stiffeners, does not exceed:
$80t_w$ where $L \le 90$ m
$55t_w$ where $L \ge 190$ m
with intermediate values by interpolation.

(b) Brackets are to be fitted to support the face plates and stiffeners.

10.5.8 For requirement 'E' stiffening:

(a) Stiffening parallel to the face plate will be required such that the distance between the stiffener and face plate, or between two stiffeners, does not exceed:
$85t_w$ where $L \le 90$ m
$60t_w$ where $L \ge 190$ m
with intermediate values by interpolation.

(b) Brackets are to be fitted to support the face plates and stiffeners.

10.6 Inertia and dimensions of stiffeners

10.6.1 The moment of inertia is to be not less than:

(a) For stiffeners normal to the primary member face plate:

$I_s = pst_w^3 \times 10^{-4}$ cm^4

where

t_w need not be greater than the values in Table 9.10.1 and

p is to be obtained from Table 9.10.2.

(b) For stiffeners parallel to the primary member face plate:

On transverses, webs and stringers

$I_s = 2l_s^2A_s$ cm^4

On longitudinal deck, side and double bottom girders, *see also* Pt 3, Ch 4,7

$I_s = 2{,}85l_s^2A_s$ cm^4

Table 9.10.1 Maximum web thickness for stiffener inertia

Requirement	Web thickness t_w, in mm
'A'	$\frac{s}{55}$
'B' and 'C'	$\frac{s}{70}$
'D'	$\frac{s}{80}$ where $L \le 90$ m; $\frac{s}{55}$ where $L \ge 190$ m } *see* Note
'E'	$\frac{s}{85}$ where $L \le 90$ m; $\frac{s}{60}$ where $L \ge 190$ m } *see* Note
NOTE Intermediate values by interpolation.	

10.6.2 Where stiffeners are fitted in both directions, the inertia of the stiffeners parallel to the face plate of the member is to be not less than that of the stiffeners fitted normally.

10.6.3 The depth of web stiffeners is to be not less than 75 mm.

10.6.4 Where flat bar stiffeners are used, the ratio of depth to thickness is not to exceed $18\sqrt{k}$.

10.7 Application of stiffening requirements

10.7.1 The requirements as detailed in 10.5 and 10.6 are to be applied in the following locations, *see also* Fig. 9.10.1.

(a) For transverses at longitudinal bulkhead:
Requirement 'A' stiffening is to extend at least as far as the lower surface of the lower cross-tie. Elsewhere, requirement 'B' stiffening is to be fitted.

(b) For deck transverses:
Requirement 'C' stiffening is to be fitted.

(c) For stringers and horizontal girders on bulkheads:
Requirement 'A' stiffening is to extend for a distance from each end of 20 per cent of the span of the stringer or girder, but at least beyond the toes of the end brackets. Elsewhere, requirement 'B' stiffening is to be fitted.

(d) For cross-ties:
Cross-ties are to be suitably stiffened to prevent buckling and twisting. Requirement 'D' stiffening is to be fitted to the lower or to a single cross-tie. Requirement 'E' stiffening is to be fitted to the upper cross-ties where two cross-ties are arranged.

(e) For shell stringers and vertical webs in fore peak:
Requirement 'A' stiffening is to extend the full length of the member.

10.7.2 The application of stiffening requirements to transverse structures where no cross-ties are fitted and within double hull structures are to be based on the results of direct calculation and will be specially considered.

10.8 Stiffening of continuous longitudinal girders

10.8.1 The webs of continuous longitudinal deck and double bottom girders are to be stiffened longitudinally. Particular attention is to be given to the stiffening of docking girders, *see also* the buckling requirements in Pt 3, Ch 4,7.

10.8.2 The stiffeners on deck girders are to be spaced not more than $55t_w$ mm apart except in way of vertical webs and end brackets, where the spacing is not to exceed $45t_w$ mm. Alternatively, a combination of parallel stiffeners at $55t_w$ mm spacing and normal stiffeners at $45t_w$ mm spacing may be adopted. Particular attention is to be given to the stiffening of the docking girder.

10.8.3 The application of stiffening requirements to girders within double hull structures is to be based on the results of direct calculation, *see also* 10.10.1.

Table 9.10.2 Coefficients for stiffener inertia

Aspect ratio of plate panel, $\frac{s}{d}$	1,0 or more	0,9	0,8	0,7	0,6	0,5	0,4	0,3 or less
p	1,5	2,1	2,9	4,2	6,1	9,2	14,6	30,0

NOTES
1. Intermediate values by interpolation.
2. The depth of panel, d, used in calculating aspect ratio may be measured from the face of the secondary member to which the primary member web stiffener is attached.

10.8.4 The moment of inertia of the stiffeners is to comply with 10.6.

10.9 Stiffening of vertical webs on transverse bulkheads

10.9.1 Vertical webs are to be fitted with stiffeners parallel to the face plate of the web and spaced not more than $60t_W$ mm apart. Stiffeners normal to the face plate are to be fitted when a vertical web supports horizontal stiffeners on transverse bulkheads. The length of stiffener is to be sufficient to distribute the load transmitted, and the connection between web stiffener and bulkhead stiffener is to comply with the relevant requirements of Pt 3, Ch 10,5.2.

10.9.2 The moment of inertia of the stiffeners is to comply with 10.6.

10.10 Double bottom girders in way of docking supports

10.10.1 Additional vertical stiffeners may be required on the bottom panels of the girder to resist docking pressures.

10.11 Lateral stability of primary members

10.11.1 Tripping brackets are generally to be fitted close to the toes of end brackets, in way of cross-ties and elsewhere, so that the spacing between brackets does not exceed the lesser of 4,5 m or 15 times the width of the face plate (20 times in the case of deck transverses). Arrangements in way of the intersections of primary members are to be such as to prevent tripping. A closer spacing of brackets may be required to be adopted with asymmetrical face plates.

10.11.2 To maintain continuity of strength, substantial horizontal and vertical brackets are to be fitted to transverses or stringers at ends of cross-ties. Horizontal brackets are to be aligned with the cross-tie face plates, and vertical end brackets are to be aligned with the cross-tie web.

10.11.3 Wide face plates may require additional support between brackets.

10.11.4 In the fore peak tank, if the angle between the normal to the shell plating and the vertical webs exceeds 20°, tripping brackets are to be fitted at the toes of end brackets and elsewhere, such that their spacing does not exceed 3 m.

10.12 Openings in web plating

10.12.1 Where openings are cut in the webs of primary supporting members, the greatest dimension of the opening is not to exceed 20 per cent of the web depth. The openings are to be kept equidistant from the corners of notches for frames and stiffeners. In the case of webs supporting single skin structures the openings are to be located so that the edges are not less than 40 per cent of web depth from the face plate. Openings are to be suitably framed where required.

10.12.2 In way of cross-ties and their end connections lightening holes are not to be cut in horizontal girders on the ship's side and longitudinal bulkheads, in symmetrical webs nor in vertical webs on longitudinal bulkheads and wing ballast tanks.

10.12.3 Holes cut in primary longitudinal members within 0,1*D* of the deck and bottom are, in general, to be reinforced as required by 4.10. Access holes may be cut in deep transverses and girders with suitable compensation to provide satisfactory resistance to deflection and shear buckling in the web.

10.12.4 All holes are to have smooth edges and are to be kept well clear of notches and the toes of brackets.

10.12.5 Small air and drain holes cut in primary members are to be kept clear of the toes of brackets and are to be well rounded with smooth edges. Where holes are cut in primary longitudinal members in areas of high stress, or where primary members are of higher tensile steel, they are to be elliptical, or equivalent, to minimize stress concentration.

10.12.6 Where holes are cut for heating coils, the lower edge of the hole is to be not less than 100 mm from the inner bottom. Where large notches are cut in the transverses for the passage of longitudinal framing, adjacent to openings for heating coils, the longitudinal notches are to be collared. Examination of the buckling strength of the web plate panel between notches for longitudinals may be required.

10.13 Brackets connecting primary members

10.13.1 The arm length of brackets connecting primary supporting members should, in general, be not less than the depth of the member web, nor exceed 1,5 times the web depth. The two arms should be of approximately equal lengths.

10.13.2 In a ring system where the end bracket is integral with the webs of the members, and the face plate is carried continuously along the edges of the members and the bracket, the full area of the largest face plate is to be maintained to the mid-point of the bracket and gradually tapered to the smaller face plates. Butts in face plates are to be kept well clear of the toes of brackets. Where a wide face plate abuts on a narrower one, the taper is generally not to exceed 1 in 4. Where a thick face plate abuts against a thinner one, if the difference in thickness exceeds 3 mm, the taper on thickness is not to exceed 1 in 3.

10.13.3 The thickness of separate end brackets is generally to be not less than that of the thicker of the primary member webs being connected, but may be required to be increased locally at the toes. The bracket is to extend to adjacent tripping brackets, stiffeners or other support points. Bracket toes are to be well radiused. Where the bracket is attached to a corrugated bulkhead, suitable arrangements are to be made to dissipate the load at the bracket toe. Details of the welding to be used in way of toes of separate brackets are to be submitted, *see also* Pt 3, Ch 10,5.1.7.

10.13.4 Brackets are to be fitted with suitable face plates and stiffeners. The maximum distance from the face plate to the first parallel stiffener is to be $30t_b$. Subsequent stiffeners lying parallel to the face may be spaced not more than $45t_b$ apart. The maximum arm length for an unstiffened triangular panel is $100t_b$, *see* Fig. 9.10.2. The depth of stiffeners is to be not less than 75 mm, and their moment of inertia is to comply with 10.6.

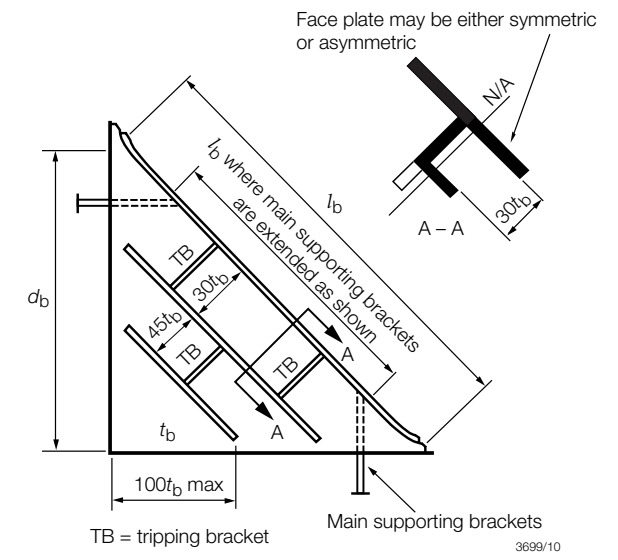

Fig. 9.10.2 Primary member end brackets

10.13.5 The area of discontinuous face plates is generally to be about 80 per cent of the area of the face plates of the adjacent members. However, where the stiffener adjacent to the face plate is of increased size, consideration will be given to the face area required. In addition, the following expression is to be satisfied:

$$\sqrt{\frac{I_b}{A_b}} \geq 2\, l_b$$

10.13.6 The ends of discontinuous face plates are to be well tapered. The taper may be 1 in 3, but where the width of the face plate exceeds 500 mm, a taper not less than 1 in 4 is generally to be adopted. Stiffeners adjacent to the face plate should be tapered 1 in 2, and other stiffeners may be cut at 45°.

10.13.7 Face plates and web stiffeners are to be suitably supported against tripping, *see* Fig. 9.10.2.

10.13.8 In the case of very large brackets with heavy face plates, it is recommended that the effective span, l_b, be reduced by extending the primary member main supporting brackets to provide lateral stability to the face plate, *see* Fig. 9.10.2.

10.14 Arrangements at intersections of continuous secondary and primary members

10.14.1 For details and connections of collars, *see* Pt 3, Ch 10,5.2.

■ *Section 11*
Ships for alternate carriage of oil cargo and dry bulk cargo

11.1 Application

11.1.1 The requirements of this Section apply to ships intended to carry oil in bulk with a flash point not exceeding 60°C (closed cup test) or dry bulk cargo alternatively.

11.1.2 In addition to this Chapter the requirements of Chapter 7 and Chapter 11 are also to be complied with as applicable. Particular attention is drawn to the minimum thickness requirements of Section 10.

11.2 Class notations

11.2.1 Ships complying with the requirement of this section will be eligible for one of the following class notations, as applicable.

(a) **100A1 Oil or Bulk Carrier, ESP**
(b) **100A1 Oil or Bulk Carrier strengthened for heavy cargoes, holds ... may be empty, ESP**
(c) **100A1 Oil or Bulk Carrier strengthened for heavy cargoes, any hold may be empty, ESP**
(d) **100A1 Ore or Oil Carrier, ESP**.

11.2.2 The notation **ESP** serves to identify the ship as being subject to an Enhanced Survey Programme as detailed in Pt 1, Ch 3,3 and Ch 3,6, *see also* Pt 1, Ch 2,2.3.12.

11.2.3 The above notations assume that dry cargoes and oil cargoes will not be carried simultaneously. However, oil may be retained in slop tanks when the ship is carrying dry cargo, provided that these tanks comply with the requirements of the Rules. Gas freeing, inerting, and isolating by approved arrangements of the remaining tanks and holds before loading ore or other dry cargoes is the responsibility of the Owner and is to be accordance with National and Port Authority requirements.

11.2.4 The Regulations for classification and the assignment of class notations are given in Pt 1, Ch 2 to which reference should be made.

11.3 Structural configuration and ship arrangement

11.3.1 The requirements contained in this Section apply to the following ship types:

(a) Oil or bulk carrier with a basic structural configuration having a single deck hull and which includes, a double skin side structure, double bottom, hopper side tanks and topside tanks fitted below the upper deck. A typical cross section is indicated in Fig. 9.11.1(a). However, consideration will be given to other arrangements on the basis of the requirements of this Section. The requirements of Chapter 7 are to be applied.

(b) Ore or oil carrier with a basic structural configuration having a single deck hull and which includes, a double skin side structure, two longitudinal bulkheads, and a double bottom throughout the centre hold and wing tanks. A typical cross section is indicated in Fig. 9.11.1(b). The requirements of Chapter 11 are to be applied.

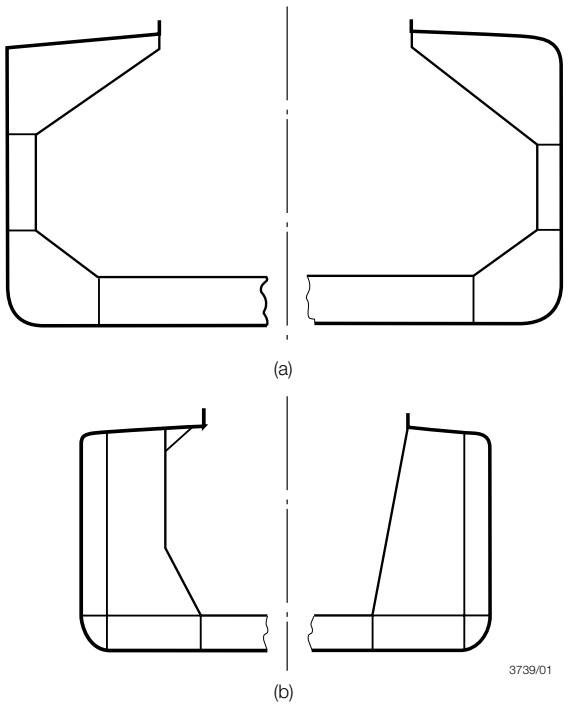

Fig. 9.11.1 Structural configuration

11.3.2 Where oil residues are to be retained on board, slop tanks of sufficient capacity to meet MARPOL requirements are to be provided and are to be separated from adjacent spaces by cofferdams which are to be capable of being flooded, except where the adjacent space is used as a pump room, ballast tank, or an oil fuel bunker tank, *see also* 1.2.2, Pt 5, Ch 15,1.9, and SOLAS Reg. II-2/D, 56.4.

11.3.3 Arrangements are to be provided for the mechanical ventilation of cargo spaces and any enclosed spaces adjacent to cargo spaces, *see* Pt 5, Ch 15,3. Similar arrangements are to be provided for cargo oil ducts which are used as pipe tunnels when the ship is carrying dry cargo, *see also* 11.3.5.

11.3.4 Openings which may be used for cargo operations, for example in the bottom of topside tanks, are not permitted in bulkheads and decks separating oil cargo spaces from other spaces not designed and equipped for the carriage of oil cargoes unless such openings are equipped with alternative approved means to ensure equivalent integrity.

11.3.5 For the requirements of ducts for cargo oil lines below decks on ore or oil carriers, *see* Pt 5, Ch 15,3.3.

11.3.6 For the requirements for access arrangements to pipe tunnels and spaces in the cargo area, *see* Section 13.

11.4 Bulkheads in way of dry/oil cargo holds

11.4.1 In way of cargo oil holds, the scantlings of the cargo space boundaries are to comply with 11.4.2 and 11.4.6.

11.4.2 The scantlings of vertically corrugated and double plate transverse bulkheads supported by stools are to be determined in accordance with the requirements of 7.4.1, 7.4.2 and Ch 7,10.2. In general, the bulkheads are to have stiffening or corrugations arranged vertically, supported by top and bottom end stools. Alternative arrangements will, however, be considered.

11.4.3 The longitudinal bulkheads including bulkhead forming inner hull, and the sloped bulkheads of the topside and double bottom tanks are to comply with Section 6. However, in way of cargo holds b_1 is to be taken as the horizontal distance from the plate or longitudinal under consideration to the vertical projection of the hatch side furthest away from the bulkhead. For longitudinal framing the determination of the span point may be in accordance with Pt 3, Ch 3,3. The scantlings of the sloped bulkhead of the double bottom hopper tanks in way of the dry cargo holds are to be not less than the requirements of Ch 7,9.

11.4.4 The arrangement of stools and adjacent structure common with dry cargo holds is to be designed to avoid pockets in which gas could collect.

11.4.5 Where the form of construction used for transverse bulkheads in wing tanks is different from that used in centre holds, arrangements are to be made to ensure continuity of transverse strength through the longitudinal bulkhead.

11.4.6 Where partial filling of centre holds with liquid is contemplated, the scantlings and structural arrangements of the boundary bulkheads are to be capable of withstanding the loads imposed by the movement of liquid in the holds. The magnitude of the predicted loadings, together with the scantling calculations, may require to be submitted.

11.5 Bulkheads in wing tanks of ore or oil carriers

11.5.1 Oiltight bulkheads in wing tanks of ore or oil carriers, *see* 11.3.1(b), are to comply with the requirements for transverse oiltight bulkhead plating, stiffening and primary structure given in Sections 7 and 9.

11.5.2 Non-oiltight bulkheads in wing tanks are to comply with the requirements given in Sections 8 and 9. The bulkhead plating is to be suitably reinforced in way of double bottom scarfing arrangements and the ends of centre hold deck transverses. Openings in wing tank bulkheads are to be kept clear of these areas.

11.6 Cofferdam bulkheads

11.6.1 The scantlings of cofferdam bulkheads not forming the boundary of a cargo space are to be as required by Section 7.

11.7 Hatchways

11.7.1 The scantlings of the cargo hold hatch coamings are to comply with Pt 3, Ch 11,5 and the cargo hold hatch covers with Pt 3, Ch 11,2 and Pt 4, Ch 7,12.

11.7.2 Where cargo holds are intended to be partly filled the hatch covers may require to be additionally strengthened, *see also* 11.4.6.

11.7.3 Slop tank hatches and cleaning openings are only permitted on open deck. Unless these openings are closed with a watertight bolted plate, the locking arrangements are to be under the control of a responsible officer.

11.8 Hatch coamings

11.8.1 The height and construction of hatch coamings are to comply with Pt 3, Ch 11,5 and Pt 4, Ch 7,13.

■ *Section 12* Heated cargoes

12.1 General

12.1.1 This Section applies to the carriage of heated cargoes in vessels having a structural configuration as shown in Table 9.1.3 and Fig. 9.11.1.

12.2 Carriage of heated cargoes

12.2.1 Where cargoes are to be carried at temperatures above *T* during the voyage, temperature distribution investigations and thermal stress calculations are to be submitted. These are to be carried out using the actual temperature of the cargo during the voyage and compared with calculations carried out for a cargo temperature of *T*. For the purpose of these calculations, *T* is to be taken as follows:

(a) Where longitudinal framing is adopted, *T* = 65°C.
(b) Where transverse framing is adopted for the longitudinal bulkhead, inner hull and side shell, *T* = 80°C.

12.2.2 The calculations are to give the resultant stresses on the hull structure, based on a sea temperature of 0°C and an air temperature of 5°C. Any proposals for reinforcement of the hull structure and/or limitation of the still water bending moment for heated cargo conditions are to be submitted.

12.2.3 Submitted proposals are to take account of non-uniform loading patterns with resultant variations in temperature distribution, where applicable.

12.3 Loading of hot oil cargoes

12.3.1 Hot oil cargoes may be loaded at the permitted carriage temperature in 12.2.1 or the temperature given below, whichever is the greater, without the need for temperature distribution and thermal stress calculations, providing the temperature specified in 12.2.1(a) and (b) is not exceeded during the voyage:
(a) 65°C for sea temperatures of 0°C and below.
(b) 75°C for sea temperatures of 5°C and above.
(c) By linear interpolation between (a) and (b) above, for sea temperatures between 0°C and 5°C.

■ *Section 13* Access arrangements and closing appliances

13.1 General

13.1.1 For requirements in respect of coamings and closing of deck openings, *see* Pt 3, Ch 11,7.

13.1.2 Openings in cargo oil tanks are not to be located in enclosed spaces.

13.1.3 Ladders and platforms in cargo tanks, pump rooms and cofferdams are to be securely fastened to the structure, *see also* 2.3.

13.2 Access to spaces in the cargo area

13.2.1 Access to cofferdams, vertical wing and double bottom ballast tanks, cargo tanks and other spaces in the cargo area shall be direct from the open deck and such as to ensure their complete inspection. Access to double bottom tanks in way of cargo oil tanks, where wing ballast tanks are omitted, is to be provided by trunks from the exposed deck led down the bulkhead. Alternative proposals will, however, be considered provided the integrity of the inner bottom is maintained. Access to double bottom spaces may also be through a cargo pump room, pump room, deep cofferdam, pipe tunnel or similar compartments, subject to consideration of ventilation aspects.

13.2.2 Where a duct keel or pipe tunnel is fitted, and access is normally required for operational purposes, access is to be provided at each end and at least one other location at approximately mid-length. Access is to be directly from the exposed deck. Where an after access is to be provided from the pump room to the duct keel, the access manhole from the pump room to the duct keel is to be provided with an oiltight cover plate. Access is not to be via the engine room. Mechanical ventilation is to be provided and such spaces are to be adequately ventilated prior to entry. A notice-board is to be fitted at each entrance to the pipe tunnel stating that before any attempt is made to enter, the ventilating fan must have been in operation for an adequate period. In addition, the atmosphere in the tunnel is to be sampled by a reliable gas monitor, and where an inert gas system is fitted in cargo tanks, an oxygen monitor is to be provided.

13.2.3 In ships for the alternate carriage of oil cargo and dry bulk cargo where the boundary of a slop tank is part of a cargo pump room bulkhead any openings from the cargo pump room to the double bottom, pipe tunnel or other enclosed space are to be provided with a gas tight bolted cover.

13.2.4 Every double bottom space is to be provided with separate access without passing through other neighbouring double bottom spaces.

13.2.5 Where the tanks are of confined or cellular construction, two separate means of access from the weather deck are to be provided, one to be provided at either end of the tank space.

13.2.6 For access through horizontal openings, hatches or manholes, the dimensions are to be sufficient to allow a person wearing a self-contained air-breathing apparatus and protective equipment to ascend or descend any ladder without obstruction and also to provide a clear opening to facilitate the hoisting of an injured person from the bottom of the space. The minimum clear opening is to be not less than 600 mm x 600 mm.

13.2.7 At least one horizontal access opening of 600 mm x 800 mm clear opening is to be fitted in each horizontal girder in the vertical wing ballast space and weather deck to assist in rescue operations.

13.2.8 For access through vertical openings, or manholes providing passage through the length and breadth of the space, the minimum clear opening is to be not less than 600 mm x 800 mm at a height of not more than 600 mm from the bottom shell plating unless gratings or other footholds are provided.

13.2.9 For oil tankers of less than 5000 tonnes DWT smaller dimensions may be approved by the National Administration concerned in special circumstances, if the ability to traverse such openings or to remove an injured person can be proved to the satisfaction of the Administration.

13.2.10 In double hull construction with the wing ballast tanks having restricted access through the vertical transverse webs, permanent arrangements are to be provided within the tanks to permit access for inspection at all heights in each bay. These arrangements which should comprise fixed platforms or other means are to provide sufficiently close access to carry out Close-Up Surveys as defined in Pt 1, Ch 3,7, using limited portable equipment where appropriate. Details of these arrangements are to be submitted for approval.

13.2.11 On very large tankers it is recommended that consideration be given to providing permanent facilities for staging the interior of cargo tanks situated within the cargo tank region and of large tanks elsewhere. Suitable provisions would be:

- Staging which can be carried on board and utilized in any tank, including power-operated lift or platform systems.
- Enlargement of structural members to form permanent, safe platforms, e.g. bulkhead longitudinals widened to form stringers (in association with manholes through primary members).
- Provision of inspection/rest platforms at intervals down the length of access ladders.
- Provision of manholes in upper deck for access to staging in cargo tanks.

13.2.12 Attention is drawn to 7.1.7, concerning provision of manholes in transverse bulkheads.

■ *Section 14*
Direct calculations

14.1 Application

14.1.1 Direct calculations are to be carried out for the derivation of scantlings where they are required by the preceding Sections of this Chapter or by related provisions included in Part 3.

14.1.2 Direct calculation methods are also generally to be used where additional calculations are required by the Rules in respect of unusual structural arrangements.

14.2 Procedures

14.2.1 For details of LR's direct calculation procedures, *see* Pt 3, Ch 1,2. For requirements concerning use of other calculation procedures, *see* Pt 3, Ch 1,3.

14.2.2 Details of direct calculation procedures for determining the scantlings of boundary bulkheads for partially filled tanks are given in *ShipRight SDA Procedure, Sloshing loads and Scantling Assessment*.

Section

1 **General**

2 **Primary members supporting longitudinal framing**

3 **Primary members supporting transverse side framing**

4 **Primary members supporting oiltight bulkheads**

5 **Primary members supporting non-oiltight bulkheads**

6 **Trunked construction**

7 **Construction details and minimum thickness**

Section 1 General

1.1 Application

1.1.1 The requirements specified in Chapter 9 are applicable to small conventional single hull oil tankers where relevant, together with the additional requirements of this Chapter.

1.1.2 For tankers intended to load or unload whilst aground, *see* Pt 3, Ch 9,13.

1.2 Class notations

1.2.1 Sea-going ships complying with the requirements of Chapter 9, where relevant, together with the additional requirements of this Chapter will be eligible to be classed **100A1 Oil Tanker, ESP**.

1.2.2 The Notation **ESP** serves to identify the ships as being subject to an Enhanced Survey Programme as detailed in Pt 1, Ch 3,3 and Ch 3,6, *see also* Pt 1, Ch 2,2.

Section 2 Primary members supporting longitudinal framing

2.1 General

2.1.1 These requirements are applicable to the following structural arrangements for ships with two longitudinal bulkheads:

(a) Centre tank structure:
  (i) Primary supporting centreline girder between oiltight transverse bulkheads, in association with up to five transverses.
  (ii) Bottom transverses spanning between longitudinal bulkheads in association with a non-primary centreline docking girder.
  (iii) Double bottom.

(b) Wing tank structure:
  (i) Transverse ring structure consisting of bottom, side shell, longitudinal bulkhead and deck transverses and incorporating one cross-tie or no cross-ties in tankers not exceeding 75 m in length.
  (ii) Double bottom.

2.1.2 The requirements are also applicable to structural arrangements incorporating a single longitudinal bulkhead located on the ship's centreline without cross-ties, for tankers not exceeding 75 m in length.

2.1.3 The minimum thickness and constructional detail requirements of Section 7 are to be complied with. Particular attention is to be paid to the design of end connections between primary members and buttresses. The shear and combined stress levels in these connections are to be examined and should be within the limits specified in *ShipRight SDA Procedure, Guidance Notes on Direct Calculations*.

2.2 Symbols

2.2.1 The symbols used in this Section are defined as follows:

b_{e1}, b_{e2} = effective end bracket leg length, in metres, at each end of the member, *see* Pt 3, Ch 3,3
b_T = overall breadth of tank, in metres
h_b = $0{,}75D + 2{,}45$ m
h_c = vertical distance from the centre of the cross-tie to deck at side amidships, in metres
h_s = distance between the lower span point of the side transverse and the moulded deck line at side, in metres
l_c = one-half the vertical distance, in metres, between the cross-tie and the centre of the adjacent bottom or deck transverse, or double bottom, *see* Fig. 10.2.3
l_T = overall length of tank, in metres
s = spacing of transverses, in metres
A = net sectional area of the web including end bracket where applicable, in cm^2
I_G = moment of inertia of the girder, in cm^4
I_T = moment of inertia of the transverse, in cm^4
Q_x = shear force at the actual section under consideration, obtained from shear force diagrams constructed as indicated, in kN (tonne-f)
S_c = length of cross-tie between the face plates on the vertical transverse webs at the cross-ties, in metres
S_G = span of girder, in metres, and is in no case to be taken less than (l_T – 1,8s) metres
S_s = span of the side transverses, in metres, and is to be measured between end span points, *see* Fig. 10.2.3
S_T = span of transverses, in metres.

2.2.2 Other symbols are defined in Ch 9,1.6.

2.3 Structural arrangements

2.3.1 The spacing of transverses is not to exceed 3,6 m.

2.3.2 Where a trunk is fitted, the scantlings of primary members are to be modified as required by Section 6.

2.4 Bottom structure coefficients

2.4.1 Where a primary supporting bottom centreline girder is fitted, in a single bottom, the requirements for the girder and transverses may be derived using bending moment and shear force coefficients K_1 and K_2 determined from Table 10.2.1. To obtain the coefficients, the following factors are required:

$$\alpha = \frac{l_T - S_G}{2s}$$

$$\beta = \frac{S_G^3 I_T}{S_T^3 I_G}$$

Initially, an estimated value of the ratio $\frac{I_T}{I_G}$ may be used, and an iterative process adopted to obtain the final required values.

2.4.2 Where bottom transverses are fitted in association with a non-primary centreline girder the coefficients for the transverse are to be taken as:

K_1 = 0,083

K_2 = 0,50

For the requirements for the non-primary girder, *see* 2.6.

2.4.3 In ships with one longitudinal bulkhead, the coefficient for the bottom transverse is to be taken as:

K_1 = 0,177.

2.5 Bottom transverses

2.5.1 The section modulus of bottom transverses is to be not less than:

$$Z = 62K_1 s h_b S_T^2 k \quad \text{cm}^3$$

2.5.2 In ships with two longitudinal bulkheads, the depth of the bottom transverse web plate is to be not less than $0{,}2S_T$ and the net sectional area of the web at any section, including vertical end connections, is to be not less than:

$$A = 0{,}12Q_x k \quad \text{cm}^2$$

$$\left(A = \frac{Q_x k}{0{,}85} \quad \text{cm}^2\right)$$

where

Q_x is calculated from shear force diagrams constructed as shown in Fig. 10.2.1. For end connections, Q_x is to be determined by projection of the shear force diagram as indicated.

2.5.3 The moment of inertia of bottom transverses is to be not less than:

$$I = \frac{10{,}5}{k} S_T Z \quad \text{cm}^4$$

2.6 Bottom girders

2.6.1 The section modulus of the primary centreline bottom girder, where fitted, is to be not less than:

$$Z = 31K_1 b_T S_G h_b s k \quad \text{cm}^3$$

2.6.2 The net sectional area of the web at any section, including vertical end connections, is to be not less than:

$$A = 0{,}12Q_x k \quad \text{cm}^2$$

$$\left(A = \frac{Q_x k}{0{,}85} \quad \text{cm}^2\right)$$

where Q_x is calculated from a shear force diagram constructed as shown in Fig. 10.2.2. For end connections, Q_x is to be determined by projection of the shear force diagram as indicated.

2.6.3 In a single bottom the section modulus and web area of a non-primary centreline docking girder are to be not less than:

$$Z = 3{,}6 b_T D s^2 k \quad \text{cm}^3$$

$$A = 0{,}3 b_T D s k \quad \text{cm}^2$$

The scantlings of this girder may, however, be required to be increased, depending upon the docking condition and support arrangements, details of which are to be submitted. Consideration may be required to be given to restricting the level of ballast tank filling for docking purposes. The loads are to be specially considered when wing tanks are ballasted for docking.

2.6.4 Consideration will be given to alternative methods of stiffening in way of the keel blocks when accompanied by supporting calculations.

2.6.5 In way of the vertical centreline web and centreline supports to horizontal girders of transverse bulkheads, the docking girder is to be increased in depth and scantlings as necessary to provide an effective support.

2.7 Side transverses

2.7.1 The section modulus of side transverses in ships with one or two longitudinal bulkheads is to be not less than:

$$Z = K_3 s h_s S_s^2 k \quad \text{cm}^3$$

where

K_3 is given in Table 10.2.2.

Table 10.2.1 Bottom structure coefficients (*see continuation*)

(a) 1 GIRDER, 2 TRANSVERSES

β	Girder											
	K_1						K_2					
	α						α					
	0,0	0,2	0,4	0,6	0,8	1,0	0,0	0,2	0,4	0,6	0,8	1,0
0,02	0,210	0,210	0,195	0,175	0,125	0,0	1,000	1,000	1,000	1,000	1,000	1,000
0,04	0,210	0,210	0,195	0,175	0,125	0,0	0,960	0,960	0,980	1,000	1,000	1,000
0,06	0,210	0,210	0,195	0,170	0,125	0,0	0,940	0,940	0,960	0,980	1,000	1,000
0,08	0,205	0,205	0,190	0,167	0,125	0,0	0,920	0,920	0,940	0,970	1,000	1,000
0,10	0,200	0,200	0,185	0,165	0,125	0,0	0,900	0,900	0,920	0,960	0,990	1,000
0,20	0,180	0,180	0,170	0,150	0,120	0,0	0,800	0,820	0,860	0,920	0,980	1,000
0,40	0,150	0,150	0,150	0,135	0,115	0,0	0,670	0,730	0,760	0,840	0,950	1,000
0,60	0,130	0,130	0,135	0,125	0,110	0,0	0,580	0,630	0,690	0,790	0,910	1,000
0,80	0,120	0,120	0,120	0,120	0,105	0,0	0,520	0,540	0,630	0,730	0,880	1,000
1,00	0,100	0,100	0,115	0,115	0,100	0,0	0,460	0,500	0,580	0,680	0,850	1,000
	Transverses											
0,02	0,022	0,022	0,022	0,022	0,021	0,020	0,255	0,255	0,255	0,255	0,250	0,250
0,04	0,023	0,023	0,023	0,022	0,021	0,020	0,263	0,263	0,257	0,255	0,250	0,250
0,06	0,025	0,025	0,023	0,022	0,021	0,020	0,265	0,265	0,263	0,260	0,250	0,250
0,08	0,026	0,026	0,024	0,023	0,021	0,020	0,270	0,270	0,267	0,260	0,253	0,250
0,10	0,027	0,027	0,025	0,023	0,022	0,020	0,275	0,275	0,270	0,263	0,255	0,250
0,20	0,033	0,033	0,029	0,026	0,023	0,020	0,300	0,300	0,285	0,272	0,257	0,250
0,40	0,041	0,041	0,036	0,032	0,025	0,020	0,330	0,330	0,307	0,287	0,265	0,250
0,60	0,047	0,047	0,041	0,036	0,026	0,020	0,355	0,355	0,325	0,302	0,273	0,250
0,80	0,051	0,051	0,045	0,038	0,028	0,020	0,370	0,370	0,342	0,315	0,278	0,250
1,00	0,054	0,054	0,048	0,041	0,030	0,020	0,385	0,385	0,355	0,327	0,285	0,250

(b) 1 GIRDER, 3 TRANSVERSES

β	Girder											
	K_1						K_2					
	α						α					
	0,0	0,2	0,4	0,6	0,8	1,0	0,0	0,2	0,4	0,6	0,8	1,0
0,02	0,290	0,290	0,290	0,270	0,200	0,120	1,400	1,400	1,500	1,500	1,500	1,500
0,04	0,290	0,290	0,290	0,270	0,200	0,120	1,400	1,400	1,500	1,500	1,500	1,500
0,06	0,290	0,290	0,290	0,260	0,200	0,120	1,380	1,400	1,500	1,500	1,500	1,500
0,08	0,280	0,280	0,280	0,250	0,195	0,115	1,340	1,370	1,470	1,470	1,480	1,500
0,10	0,275	0,275	0,275	0,240	0,190	0,115	1,320	1,340	1,420	1,440	1,460	1,480
0,20	0,245	0,245	0,245	0,220	0,175	0,105	1,180	1,210	1,280	1,330	1,380	1,450
0,40	0,200	0,200	0,200	0,185	0,160	0,090	0,970	1,030	1,080	1,200	1,280	1,420
0,60	0,170	0,170	0,170	0,170	0,145	0,080	0,840	0,900	0,960	1,110	1,210	1,380
0,80	0,150	0,150	0,150	0,150	0,135	0,075	0,740	0,800	0,870	1,040	1,150	1,330
1,00	0,135	0,135	0,135	0,135	0,125	0,070	0,680	0,740	0,810	0,960	1,100	1,300
	Transverses											
0,02	0,025	0,025	0,024	0,023	0,022	0,022	0,258	0,258	0,257	0,252	0,252	0,252
0,04	0,026	0,026	0,025	0,024	0,023	0,023	0,267	0,267	0,267	0,262	0,262	0,260
0,06	0,028	0,028	0,026	0,026	0,025	0,024	0,275	0,275	0,275	0,270	0,270	0,265
0,08	0,030	0,030	0,028	0,028	0,026	0,026	0,285	0,285	0,280	0,272	0,272	0,272
0,10	0,032	0,032	0,029	0,029	0,028	0,027	0,292	0,292	0,287	0,277	0,275	0,275
0,20	0,040	0,040	0,037	0,035	0,033	0,032	0,325	0,325	0,315	0,310	0,300	0,282
0,40	0,052	0,052	0,049	0,046	0,041	0,039	0,372	0,372	0,360	0,345	0,332	0,320
0,60	0,059	0,059	0,057	0,054	0,048	0,045	0,405	0,405	0,392	0,375	0,357	0,342
0,80	0,065	0,065	0,063	0,059	0,053	0,049	0,425	0,425	0,415	0,390	0,377	0,360
1,00	0,069	0,069	0,066	0,063	0,056	0,052	0,440	0,440	0,432	0,415	0,395	0,375

Table 10.2.1 Bottom structure coefficients (*conclusion*)

(c) 1 GIRDER, 4 TRANSVERSES

β	Girder											
	K_1						K_2					
	α						α					
	0,0	0,2	0,4	0,6	0,8	1,0	0,0	0,2	0,4	0,6	0,8	1,0
0,02	0,370	0,350	0,330	0,315	0,275	0,215	1,890	1,890	1,920	1,940	1,960	1,990
0,04	0,370	0,350	0,330	0,315	0,275	0,215	1,870	1,870	1,900	1,930	1,940	1,960
0,06	0,360	0,350	0,330	0,310	0,270	0,205	1,820	1,820	1,870	1,890	1,920	1,940
0,08	0,350	0,340	0,320	0,300	0,260	0,200	1,760	1,800	1,820	1,840	1,880	1,920
0,10	0,340	0,330	0,315	0,290	0,255	0,195	1,700	1,750	1,790	1,830	1,860	1,900
0,20	0,300	0,300	0,275	0,260	0,230	0,180	1,500	1,580	1,630	1,700	1,780	1,820
0,40	0,240	0,240	0,230	0,220	0,200	0,155	1,240	1,300	1,400	1,540	1,620	1,700
0,60	0,200	0,200	0,200	0,200	0,175	0,135	1,060	1,120	1,250	1,400	1,500	1,600
0,80	0,175	0,175	0,175	0,175	0,165	0,120	0,940	1,000	1,150	1,270	1,420	1,520
1,00	0,150	0,150	0,150	0,150	0,150	0,105	0,850	0,920	1,050	1,200	1,340	1,460
	Transverses											
0,02	0,025	0,025	0,024	0,024	0,023	0,023	0,255	0,255	0,255	0,255	0,253	0,250
0,04	0,027	0,026	0,026	0,025	0,025	0,024	0,272	0,270	0,268	0,266	0,260	0,255
0,06	0,029	0,029	0,028	0,027	0,026	0,025	0,282	0,280	0,275	0,272	0,270	0,263
0,08	0,031	0,031	0,030	0,028	0,028	0,027	0,292	0,287	0,285	0,280	0,275	0,270
0,10	0,033	0,033	0,032	0,030	0,029	0,028	0,300	0,295	0,290	0,285	0,280	0,275
0,20	0,042	0,041	0,039	0,037	0,035	0,033	0,335	0,325	0,320	0,313	0,307	0,300
0,40	0,053	0,051	0,050	0,047	0,044	0,041	0,380	0,372	0,362	0,352	0,342	0,330
0,60	0,061	0,059	0,057	0,054	0,050	0,047	0,412	0,405	0,387	0,376	0,365	0,355
0,80	0,066	0,065	0,062	0,058	0,054	0,051	0,435	0,425	0,412	0,400	0,382	0,370
1,00	0,070	0,068	0,065	0,062	0,058	0,055	0,450	0,437	0,427	0,412	0,395	0,385

(d) 1 GIRDER, 5 TRANSVERSES

β	Girder											
	K_1						K_2					
	α						α					
	0,0	0,2	0,4	0,6	0,8	1,0	0,0	0,2	0,4	0,6	0,8	1,0
0,02	0,455	0,440	0,410	0,380	0,345	0,300	2,330	2,350	2,370	2,400	2,420	2,450
0,04	0,445	0,430	0,410	0,380	0,345	0,300	2,310	2,340	2,360	2,380	2,410	2,440
0,06	0,430	0,415	0,395	0,370	0,340	0,295	2,250	2,290	2,300	2,340	2,380	2,400
0,08	0,415	0,400	0,385	0,365	0,330	0,290	2,180	2,230	2,280	2,290	2,340	2,360
0,10	0,400	0,390	0,375	0,355	0,320	0,280	2,110	2,170	2,200	2,240	2,300	2,320
0,20	0,345	0,340	0,330	0,315	0,285	0,250	1,840	1,920	2,000	2,040	2,130	2,180
0,40	0,270	0,265	0,265	0,265	0,235	0,200	1,500	1,600	1,700	1,790	1,900	1,970
0,60	0,220	0,220	0,220	0,220	0,200	0,165	1,280	1,380	1,500	1,610	1,650	1,840
0,80	0,185	0,185	0,185	0,185	0,175	0,140	1,140	1,230	1,370	1,500	1,620	1,740
1,00	0,165	0,165	0,165	0,165	0,160	0,125	1,040	1,140	1,280	1,420	1,540	1,650
	Transverses											
0,02	0,025	0,025	0,025	0,024	0,024	0,023	0,265	0,265	0,263	0,260	0,257	0,255
0,04	0,028	0,028	0,028	0,027	0,026	0,025	0,280	0,280	0,275	0,270	0,267	0,265
0,06	0,031	0,031	0,030	0,029	0,028	0,027	0,290	0,287	0,284	0,280	0,277	0,275
0,08	0,034	0,034	0,033	0,032	0,031	0,030	0,303	0,300	0,295	0,290	0,287	0,283
0,10	0,037	0,036	0,036	0,034	0,033	0,032	0,312	0,309	0,305	0,300	0,297	0,292
0,20	0,046	0,046	0,045	0,043	0,043	0,041	0,352	0,349	0,343	0,337	0,330	0,325
0,40	0,060	0,058	0,057	0,055	0,054	0,053	0,405	0,402	0,393	0,383	0,378	0,375
0,60	0,068	0,067	0,065	0,064	0,063	0,061	0,435	0,432	0,426	0,417	0,412	0,407
0,80	0,073	0,072	0,071	0,069	0,068	0,067	0,455	0,452	0,446	0,440	0,436	0,432
1,00	0,077	0,076	0,074	0,073	0,071	0,070	0,470	0,467	0,461	0,455	0,450	0,445

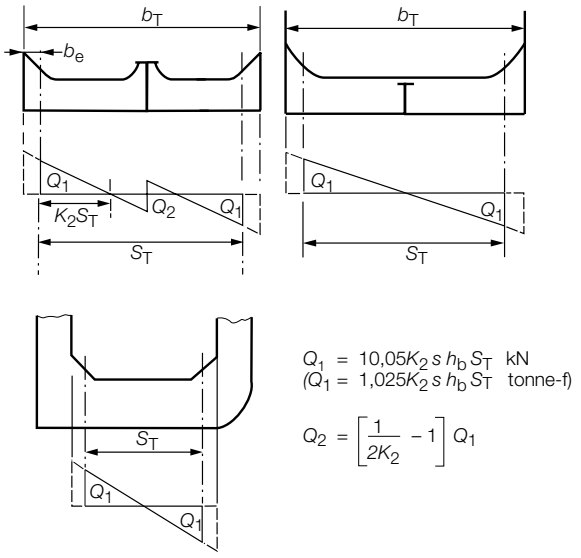

Fig. 10.2.1 Bottom transverses

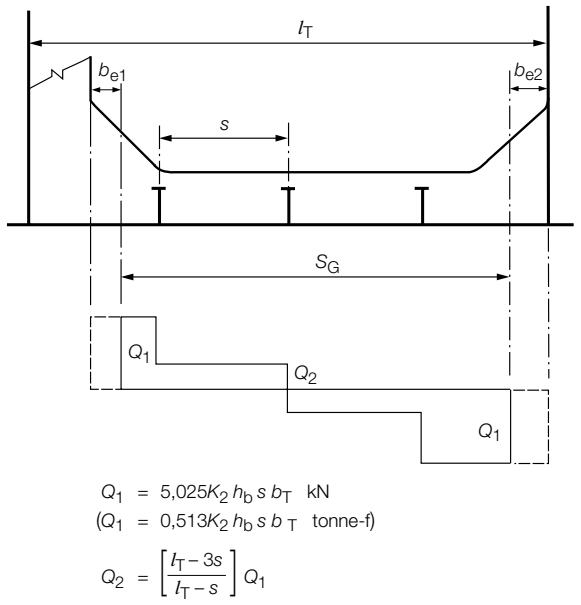

Fig. 10.2.2 Bottom centreline girder

2.7.2 In ships with two longitudinal bulkheads, the net sectional area of the web at any section is to be not less than:

$$A = 0{,}12 Q_x k \quad \text{cm}^2$$

$$\left(A = \frac{Q_x k}{0{,}85} \quad \text{cm}^2\right)$$

where Q_x is calculated from shear force diagrams constructed as shown in Fig. 10.2.3. For this purpose the values of K_4 and K_5 and the range of application is given in Table 10.2.2.

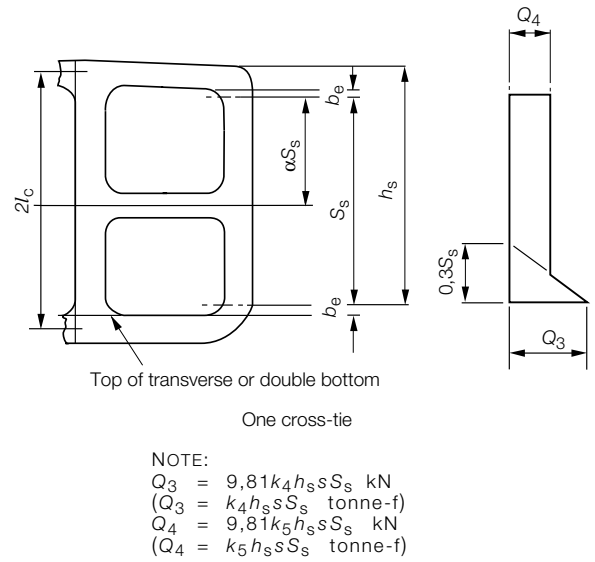

Fig. 10.2.3 Wing tank construction

2.7.3 The moment of inertia of side transverses is to be not less than:

$$I = \frac{7{,}5}{k} S_s Z \quad \text{cm}^4.$$

2.8 Deck transverses

2.8.1 The section modulus of deck transverses is to be not less than:

$$Z = 53{,}75\,(0{,}0269sL + 0{,}8)\,(S_T + 1{,}83)\,k \quad \text{cm}^3$$

Where a continuous deck girder is fitted, the term S_T in the above formula is to be replaced by $\frac{S_T}{2}$.

Table 10.2.2 Side transverse coefficients

Number of cross-ties	K_3	K_4	K_5	Range of application
0	8	Not applicable		$L \le 75$ m (*see* 2.3)
1	2,16	$0{,}455 - 0{,}316\alpha$	0,103	$0{,}5 \le \alpha \le 0{,}7$

2.8.2 The net sectional area of the web is to satisfy the requirements of 2.5.2 using a head, $h_b = \frac{L_1}{56}$ m.

2.8.3 The moment of inertia of the transverses is to be not less than:

$$I = \frac{7,5}{k} S_T Z \quad \text{cm}^4.$$

2.9 Deck girders

2.9.1 Where a continuous deck centreline girder supporting deck transverses is fitted, it is to have a section modulus not less than:

$$Z = 0,0476 S_G^2 b_T L k \quad \text{cm}^3$$

2.9.2 The net sectional area of the web is to satisfy the requirements of 2.6.2 using a head, $h_b = \frac{L_1}{56}$ m.

2.9.3 In way of the vertical centreline web on transverse bulkheads, the continuous deck girder is to be increased in depth and scantlings as necessary to provide an effective support.

2.9.4 Where an intercostal deck girder is fitted, it is to have a depth not less than 50 per cent of the depth of the deck transverse and the area of the face flat is to be not less than that of the transverse.

2.9.5 In way of the vertical centreline web and centreline supports to horizontal girder on transverse bulkheads, the intercostal deck girder may be required to be increased in depth and scantlings to provide an effective support.

2.10 Cross-ties

2.10.1 Cross-ties, where fitted, may be of plate or sectional material and are to have an area and least moment of inertia not less than:

$$A = (64 + 1,035 l_c h_c s) k \quad \text{cm}^2$$

$$I = 2,45 l_c h_c s S_c^2 \quad \text{cm}^4.$$

2.10.2 Design of end connections is to be such that the area of the welding, including vertical brackets, where fitted, is to be not less than the minimum cross-sectional area of the cross-tie derived from 2.10.1. To achieve this full penetration may be required and thickness of brackets may require further consideration. Attention is to be given to the full continuity of area of the backing structure on the transverses. Particular attention is also to be paid to the welding at the toes of all vertical end brackets on the cross-tie.

2.11 Double bottom girders and floors

2.11.1 The scantlings of girder and floors are to satisfy the requirements of Ch 1,8.3 and Ch 1,8.5 respectively for longitudinally framed ships.

■ *Section 3* Primary members supporting transverse side framing

3.1 General

3.1.1 The requirements of this Section are applicable to side stringers and transverse webs associated with transverse framing.

3.1.2 The minimum thickness and constructional detail requirements of Section 7 are to be complied with.

3.2 Symbols

3.2.1 The symbols used in this Section are defined as follows:

h_1 = head, in metres, from stringer to highest point of tank excluding hatchway, but not less than 2,5 m

Q_x = shear force at the actual section under consideration, obtained from shear force diagrams constructed as indicated, in kN (tonne-f)

S_1 = span, in metres, of the horizontal girder measured between span points, but to be taken not less than the lesser of (1,2 + 0,02*L*) m or 3 m.

3.2.2 Other symbols are defined in Ch 9,1.6.

3.3 Structural arrangements

3.3.1 Side shell stringers are to be fitted as required by Table 10.3.1. Alternatively, the number of stringers may be derived by direct calculation, particular regard being given to secondary bending effects on the frames supported.

Table 10.3.1 Requirements for stringers

Ship depth, in metres	Number of stringers
$D \le 6,0$	0
$6,0 < D \le 7,5$	1
$7,5 < D \le 11,0$	2

3.3.2 Where the spacing of bulkheads (oiltight or non-oiltight) exceeds 15 m, side transverses are to be fitted in line with each bottom transverse.

3.3.3 Where side transverses are not required, bottom transverses are to be adequately supported at the side shell and longitudinal bulkhead, and the lower side stringer is to be suitably buttressed from the bottom transverse.

3.3.4 Cross-ties, where fitted, are to comply with the requirements of 2.10 and are, in general, to be aligned with the stringers.

3.3.5 Where the ship is fitted with a trunk, the scantlings as given in this Section are to be modified as required by Section 6.

3.4 Scantlings

3.4.1 The section modulus of side stringers is to be not less than:

$$Z = 10b\, h_1\, S_1^2\, k \quad \text{cm}^3.$$

3.4.2 The net sectional area of the web at any section is to be not less than:

$$A = 0{,}12 Q_x\, k \quad \text{cm}^2$$

$$\left(A = \frac{Q_x\, k}{0{,}85} \quad \text{cm}^2\right)$$

where Q_x is calculated from a shear force diagram constructed using the shear force at the span point, Q_1 given by the following:

$$Q_1 = 5{,}03s\, h_1\, S_1 \quad \text{kN}$$

$$(Q_1 = 0{,}513s\, h_1\, S_1 \quad \text{tonne-f}).$$

3.4.3 The moment of inertia of the stringer is to be not less than:

$$I = S_1 Z\, \frac{7{,}5}{k} \quad \text{cm}^4.$$

3.4.4 Where side transverses supporting side stringers are fitted, they are to have a section modulus not less than that required by 2.7. Where the side transverse does not support side stringers, the section modulus required by 2.7 may be reduced by 20 per cent.

■ *Section 4* Primary members supporting oiltight bulkheads

4.1 General

4.1.1 These requirements are applicable to ships having two longitudinal bulkheads, and to ships not exceeding 75 m in length having one longitudinal bulkhead located on the centreline of the ship.

4.1.2 The minimum thickness and construction detail requirements of Section 7 are to be complied with. Particular attention is to be paid to the design of end connections between primary members and buttresses. Where considered necessary, the shear and combined stresses in the connections may require to be examined and the scantlings and stiffening increased.

4.2 Symbols

4.2.1 The symbols used in this Section are defined as follows:

h = the distance from the centre of the load on the member to a point 2,45 m above the highest point of the tank, excluding the hatchway, in metres

Q_x = shear force at the actual section under consideration, obtained from shear force diagrams constructed as indicated, in kN (tonne-f).

4.2.2 Other symbols are defined in Ch 9,1.6.

4.3 Structural arrangements

4.3.1 Where horizontal girders and vertical webs do not form part of a ring structure, they are to be arranged with substantial end brackets forming a buttress extending to the adjacent vertical web or transverse.

4.3.2 Where the cross-ties are omitted from the transverse ring in the wing tank adjacent to the bulkhead, the design of the horizontal girder, of the end buttress and of the transverse is to take account of the loads imposed and the deflection of the structure.

4.3.3 The spacing of transverses on longitudinal bulkheads is not to exceed 3,6 m.

4.3.4 Where, on ships with transverse side framing, transverses are required by Section 3, vertical webs are also to be fitted in line on the longitudinal bulkhead. Where such vertical webs are not required the lower horizontal girder on the bulkhead is to be suitably buttressed from the bottom transverses.

4.4 Scantlings

4.4.1 The scantlings of vertical webs on longitudinal bulkheads are to be as required for side transverses by Section 2.

4.4.2 The section modulus of vertical webs on transverse bulkheads and of horizontal girders is to be not less than:

$$Z = 8b\, h\, l_e^2 k \quad \text{cm}^3.$$

4.4.3 The net sectional area of the web at any section is to be not less than:

$$A = 0{,}12 Q_x\, k \quad \text{cm}^2$$

$$\left(A = \frac{Q_x\, k}{0{,}85} \quad \text{cm}^2\right)$$

where Q_x is the shear force at the section. For the horizontal girders on ships with two longitudinal bulkheads, Q_x is calculated from shear force diagrams as shown in Fig. 10.4.1. For end connections, Q_x is to be determined by projection of the shear force diagrams as indicated.

4.4.4 The moment of inertia of vertical webs and horizontal girders is to be not less than:

$$I = \frac{10{,}5}{k}\, l_e Z \quad \text{cm}^4.$$

4.4.5 For the calculation of section modulus, the minimum span of horizontal girders on longitudinal bulkheads is to be taken as not less than the lesser of (1,2 + 0,02*L*) m or 3 m.

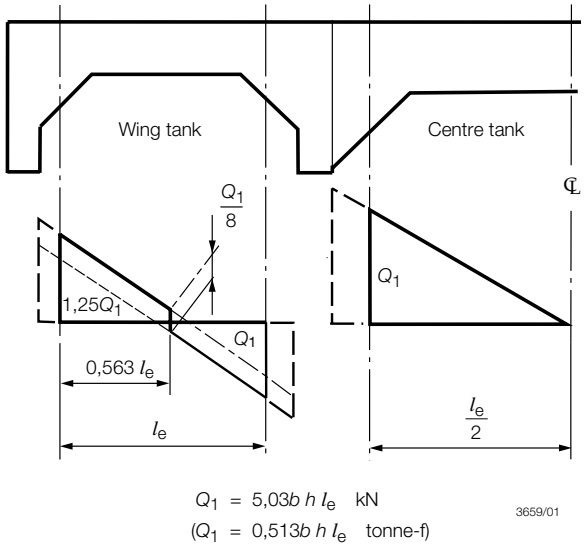

Fig. 10.4.1 Horizontal girders

4.4.6 Where a trunk is fitted, the scantlings of primary members are to be modified as required by Section 6.

■ *Section 5* Primary members supporting non-oiltight bulkheads

5.1 General

5.1.1 These requirements are applicable to primary members supporting non-oiltight transverse bulkheads. Where non-oiltight longitudinal bulkheads are proposed, the requirements for the primary members will be individually considered.

5.1.2 The minimum thickness and constructional detail requirements of Section 7 are to be complied with.

5.2 Symbols

5.2.1 The symbol, l_b, used in this Section is defined as follows:

l_b = the distance, in metres, between the transverse bulkheads (oiltight or non-oiltight) adjacent to the bulkhead under consideration.

5.2.2 Other symbols are defined in Ch 9,1.6.

5.3 Direct calculations

5.3.1 Direct calculation procedures will generally be required where the non-oiltight bulkhead primary members will interact with, or tend to support, the primary bottom, longitudinal bulkhead or side structure, and in other cases where warranted by structural design features.

5.4 Scantlings and arrangements

5.4.1 The section modulus of vertical webs is to be not less than that required for a vertical web on an oiltight transverse bulkhead in the same position, *see* Section 4 multiplied by the factor $\left(0{,}3 + 2\ \frac{l_b}{L}\right)$.

5.4.2 The section modulus of horizontal girders is to be not less than:

$$Z = 145k\ b\ l_e^2\ \frac{l_b}{L}\ \text{cm}^3.$$

5.4.3 When determining the width of plating supported and the effective breadth for calculating the section modulus, no deduction is to be made on account of perforations.

■ *Section 6* Trunked construction

6.1 General

6.1.1 The requirements of this Section are additional to those of Sections 1 to 5.

6.1.2 Where a trunk is fitted it is to extend over the full length of the cargo tanks and is to be effectively scarfed into the main hull structure.

6.1.3 The minimum thickness and constructional detail requirements of Section 7 are also to be complied with.

6.2 Symbols

6.2.1 The symbols used in this Section are defined as follows:

b_t = breadth of trunk, in metres

h_t = height of trunk, in metres, above the deck at the trunk side. Where the trunk top has excess camber, the value of h_t will be considered.

D_1 = equivalent depth of ship and is to be taken as:

$$D + 0{,}6\ \frac{b_t h_t}{B} \text{ where } \frac{b_t}{B} \le 0{,}8 \text{ and}$$

$$D + h_t\left(2{,}6\ \frac{b_t}{B} - 1{,}6\right), \text{ where } \frac{b_t}{B} > 0{,}8$$

(*see* Fig. 10.6.1).

6.2.2 Other symbols are defined in Ch 9,1.6.

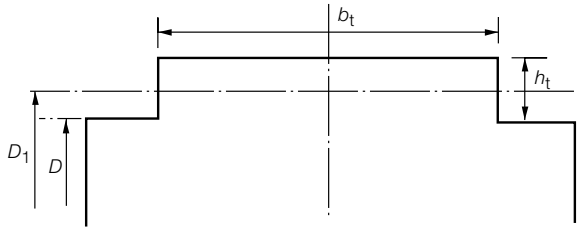

Fig. 10.6.1 Equivalent depth

6.3 Structural arrangements

6.3.1 The trunk deck and sides are to be longitudinally framed, and the transverse primary members are to be aligned with the deck transverses.

6.3.2 Particular attention is to be given to the arrangements in way of the connection of the trunk side to the deck at side. The construction is to be such as to ensure adequate rigidity and continuity of strength.

6.3.3 Typical arrangements of primary structure are shown diagrammatically in Fig. 10.6.2, which also indicates the effective spans to be used in the determination of scantlings.

6.3.4 Where the trunk primary stiffening is fitted externally, individual consideration will be given to the arrangement and scantlings.

6.3.5 Where longitudinal stiffening is fitted externally to the trunk, tripping brackets are to be fitted to maintain lateral stability in way of transverse bulkheads and elsewhere as necessary.

6.3.6 Extension brackets and web stiffeners or equivalent arrangements are to be provided at the forward and after ends of the trunk to ensure full continuity of strength from the trunk into hull and superstructures.

6.3.7 Where the carriage of heated cargoes is contemplated and, in particular, bituminous cargoes, special attention is to be given to the alignment of the scarfing arrangements and softening of the extension bracket toes at the trunk ends to alleviate the effects of thermal stressing.

6.4 Trunk scantlings

6.4.1 The thickness of the trunk top and side plating is to be not less than as required by Ch 9,4 for hull envelope plating, the item numbers for these being as given in Fig. 10.6.3.

6.4.2 The section modulus of trunk longitudinals is to be not less than as required by Ch 9,5 for deck longitudinals.

6.4.3 The section modulus and moment of inertia of the transverses is to be not less than as required by 2.8 for deck transverses.

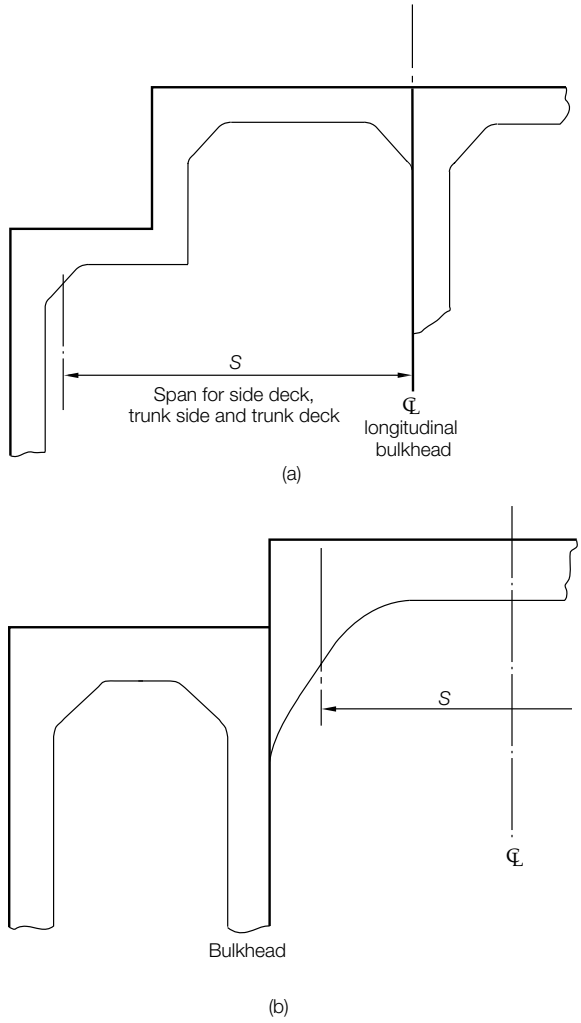

NOTE:
Spans measured to effective span point

Fig. 10.6.2 Primary structure

6.5 Modification to hull scantlings

6.5.1 The thickness of the deck plating outboard of the trunk side is to be that necessary to obtain the required hull section modulus, but is to be not less than that required by Ch 9,4 multiplied by the factor

$$\frac{2BD}{2BD + b_t h_t}.$$

6.5.2 The scantlings of the shell plating, framing, primary structure and bulkheads are to be determined on the basis of the equivalent ship depth D_1, i.e. where the depth, D, enters into the calculation or structural arrangement it is to be replaced by D_1.

6.5.3 The head to the deck at side is to be increased by $(D_1 - D)$.

6.5.4 The head to the highest point of the tank is to be replaced by the actual distance to the highest point of the tank, reduced by the amount $(D + h_t - D_1)$.

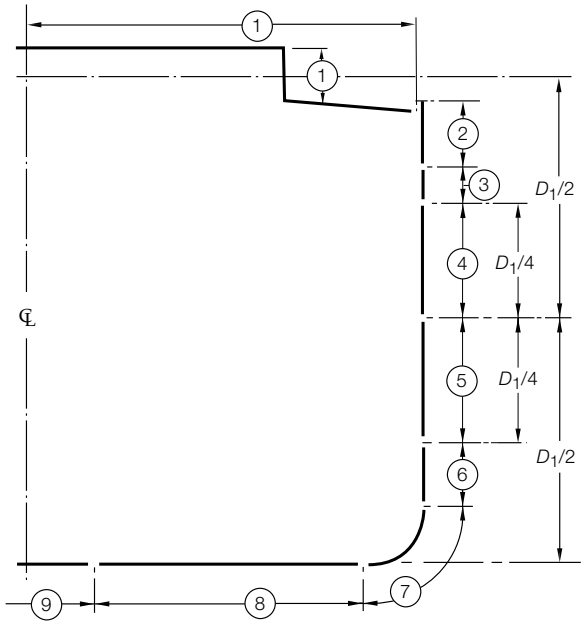

Fig. 10.6.3
Hull envelope plating – Itemization of parts

■ *Section 7* Construction details and minimum thickness

7.1 Symbols

7.1.1 The symbols used in this Section are defined in Ch 9,10.1.

7.2 Compartment minimum thickness

7.2.1 The requirements of Ch 9,10.2 are also applicable to small conventional single hull tankers.

7.3 Geometric properties and proportions of members

7.3.1 The depth of the web of any primary member is to be not less than 2,5 times the depth of the cut-outs for the passage of secondary members, except where compensation is arranged to provide satisfactory resistance to deflection and shear buckling in the web.

7.3.2 The area of material in the face plate of any primary member is not to exceed:

$0{,}00667 d_w t_w$ cm^2

nor is it to be less than:

$0{,}0167 s_t d_w$ cm^2 for the bottom centreline girder

$0{,}00417 s_t d_w$ cm^2 elsewhere.

7.3.3 The geometric properties of rolled stiffeners and built sections are to be calculated in association with an effective width of attached plating in accordance with Pt 3, Ch 3,3.

7.4 Continuity of primary members

7.4.1 Primary members are to be so arranged as to ensure effective continuity of strength throughout the range of tank structure. Abrupt changes of depth or section are to be avoided. Where members abut on both sides of a bulkhead or on other members, arrangements are to be made to ensure that they are in alignment.

7.4.2 The members are to have adequate end fixity, lateral support and web stiffening, and the structure is to be arranged to minimize hard spots or other sources of stress concentration. Openings are to have well rounded corners and smooth edges and are to be located having regard to the stress distribution and buckling strength of the plate panel.

7.5 Primary member web plate stiffening

7.5.1 The webs of primary members are to be supported and stiffened in accordance with the following requirements, which are designated as requirements ‘A’, ‘B’, ‘C’ and ‘D’. The application of these requirements is detailed in 7.5, and the corresponding locations indicated in Fig. 10.7.1. Where webs are slotted for the passage of secondary members, the web stiffeners are to be arranged to provide adequate support for the loads transmitted, *see* Pt 3, Ch 10,5.2.

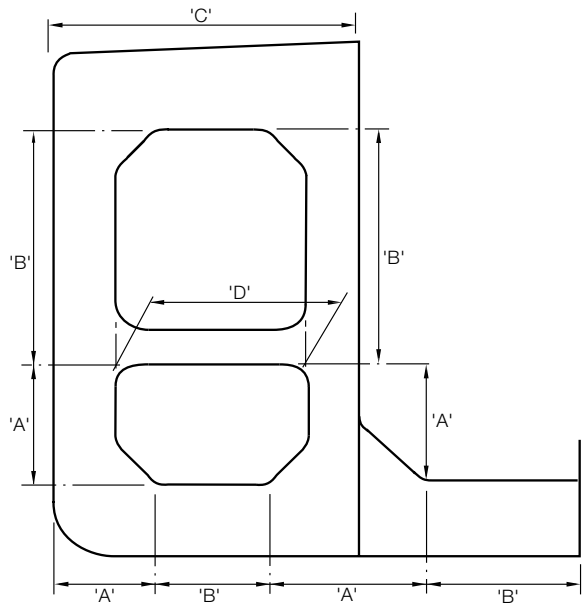

Fig. 10.7.1 Key to application requirements

7.5.2 Where higher tensile steel is used for the primary members, the maximum spacing of stiffeners given in this Section is to be multiplied by $\sqrt{k}$.

7.5.3 In addition to these stiffeners, tripping brackets as required by Ch 9,10.11 are also to be fitted.

7.5.4 For requirement 'A' stiffening:

(a) The thickness, t_w of the web is to be not less than $\frac{s}{80}$

(b) Stiffening is generally to be fitted normal to the face plate of the member, but the stiffeners parallel to the face plate will be required when the web depth, d_w, exceeds a value, d_{max} which is to be taken as:

for $s \le 55t_w$ $\quad d_{max} = 3s$

for $s > 55t_w$ $\quad d_{max} = \frac{45s\,t_w}{s - 40t_w}$

(c) Where stiffening parallel to the face plate is required, the distance from the face plate of the member to the nearest stiffener is not to exceed $65t_w$. Further stiffeners are to be fitted at similar spacing so that the distance between the last stiffener and the shell or bulkhead plating does not exceed d_{max}. In way of end brackets to transverse bulkhead primary structure, stiffeners are to be fitted normal to the face plate of the member so that web plate panel dimensions parallel to the face plate do not exceed $80t_w$.

7.5.5 For requirement 'B' stiffening:

(a) The thickness, t_w of the web is to be not less than $\frac{s}{85}$

(b) Stiffening is generally to be fitted normal to the face plate of the member, but stiffeners parallel to the face plate will be required when the web depth, d_w, exceeds a value d_{max}, which is to be taken as:

for $s \le 70t_w$ $\quad d_{max} = 3s$

for $s > 70t_w$ $\quad d_{max} = \frac{48s\,t_w}{s - 54t_w}$

(c) Where stiffening parallel to the face plate is required, the distance from the face plate of the member to the nearest stiffener is not to exceed $80t_w$. Further stiffeners are to be fitted at similar spacing so that the distance between the last stiffener and the shell or bulkhead plating does not exceed d_{max}.

7.5.6 For requirement 'C' stiffening:

(a) Stiffening is generally to be fitted normal to the face plate of the member in line with alternate secondary members, but stiffeners parallel to the face plate will be required, when the web depth, d_w exceeds a value, d_{max} which is to be taken as:

for $s \le 76t_w$ $\quad d_{max} = 3s$

for $s > 76t_w$ $\quad d_{max} = \frac{48s\,t_w}{s - 60t_w}$

(b) Where stiffening parallel to the face plate is required, the distance from the face plate of the member to the nearest stiffener is not to exceed $90t_w$. Further stiffeners are to be fitted at similar spacing so that the distance between the last stiffener and the deck plating does not exceed d_{max}.

7.5.7 For requirement 'D' stiffening:

(a) Stiffening parallel to the face plate will be required such that the distance between the stiffener and face plate, or between two stiffeners, does not exceed:

$80t_w$ where $L \le 90$ m

$55t_w$ where $L \ge 190$ m

with intermediate values by interpolation.

(b) Brackets are to be fitted to support the face plates and stiffeners.

7.6 Inertia and dimensions of stiffeners

7.6.1 The moment of inertia is to be not less than:

(a) For stiffeners normal to the primary member face plate:

$I_s = p\,s\,t_w^3 \times 10^{-4}$ cm^4

Where t_w need not be greater than the values in Table 10.7.1 and p is to be obtained from Table 10.7.2.

(b) For stiffeners parallel to the primary member face plate:

On transverses, webs and stringers

$I_s = 2 l_s^2 A_s$ cm^4

On longitudinal deck and bottom girders

$I_s = 2{,}85 l_s^2 A_s$ cm^4.

Table 10.7.1 Maximum web thickness for stiffener inertia

Requirement	Web thickness t_w, in mm
'A'	$\frac{s}{55}$
'B' and 'C'	$\frac{s}{70}$
'D'	$\frac{s}{80}$ where $L \le 90$ m; $\frac{s}{60}$ where $L \ge 190$ m } *see* Note
NOTE Intermediate values by interpolation.	

7.6.2 Where stiffeners are fitted in both directions, the inertia of the stiffeners parallel to the face plate of the member is to be not less than that of the stiffeners fitted normally.

7.6.3 The depth of web stiffeners is to be not less than 75 mm.

7.6.4 Where flat bar stiffeners are used, the ratio of depth to thickness is not to exceed $18\sqrt{k}$.

Table 10.7.2 Coefficient for stiffener inertia

Aspect ratio of plate panel, $\frac{s}{d}$	1,0 or more	0,9	0,8	0,7	0,6	0,5	0,4	0,3 or less
p	1,5	2,1	2,9	4,2	6,1	9,2	14,6	30,0

NOTES
1. Intermediate values by interpolation.
2. The depth of panel, d, used in calculating aspect ratio may be measured from the face of the secondary member to which the primary member web stiffener is attached.

7.7 Application of stiffening requirements

7.7.1 The requirements as detailed in 7.5 and 7.6 are to be applied in the following locations, see also Fig. 10.7.1.

(a) For bottom transverses:
In the centre tank requirement 'A' stiffening is to extend for 20 per cent of the breadth of the tank from the longitudinal bulkhead, but at least beyond the toe of the end bracket. In the wing tank, requirement 'A' stiffening is to extend at least as far as the toes of the end brackets from the longitudinal bulkhead and the shell. Elsewhere, requirement 'B' stiffening is to be fitted.

(b) For transverses at side shell and longitudinal bulkhead:
Requirement 'A' stiffening is to extend at least as far as the lower surface of the lower cross-tie. Elsewhere, requirement 'B' stiffening is to be fitted.

(c) For deck transverses:
Requirement 'C' stiffening is to be fitted.

(d) For stringers and horizontal girders:
Requirement 'A' stiffening is to extend for a distance from each end of 20 per cent of the span of the stringer or girder, but at least beyond the toes of the end brackets. Elsewhere, requirement 'B' stiffening is to be fitted.

(e) For cross-ties:
Cross-ties are to be suitably stiffened to prevent buckling and twisting. Requirement 'D' stiffening is to be fitted.

(f) For shell stringers and vertical webs in fore peak:
Requirement 'A' stiffening is to extend the full length of the member.

7.7.2 The application of stiffening requirements to transverse wing structures in wing tanks where no cross-ties are fitted is to be based on the results of direct calculation and will be specially considered.

7.8 Stiffening of continuous longitudinal girders

7.8.1 The webs of continuous longitudinal deck and bottom girders are to be stiffened parallel to the girder face plate.

7.8.2 The stiffeners are to be spaced not more than $55t_w$ mm apart except in way of vertical webs and end brackets, where the spacing is not to exceed $45t_w$ mm. Alternatively, a combination of parallel stiffeners at $55t_w$ mm spacing and normal stiffeners at $45t_w$ mm spacing may be adopted. Particular attention is to be given to the stiffening of the docking girder.

7.8.3 The moment of inertia of stiffeners is to comply with 7.6.

7.9 Stiffening of vertical webs on transverse bulkheads

7.9.1 Vertical webs are to be fitted with stiffeners parallel to the face plate of the web and spaced not more than $60t_w$ mm apart. Stiffeners normal to the face plate are to be fitted when a vertical web supports horizontal stiffeners on transverse bulkheads. The length of stiffener is to be sufficient to distribute the load transmitted, and the connection between web stiffener and bulkhead stiffener is to comply with the relevant requirements of Pt 3, Ch 10,5.2.

7.9.2 The moment of inertia of the stiffeners is to comply with 7.6.

7.10 Docking brackets on bottom centreline girder

7.10.1 Stiffened docking brackets are to be fitted on both sides of the bottom centreline girder, midway between transverses, and are to be connected to a suitable bottom shell longitudinal. The bracket on one side is to be connected to the face plate of the girder but the other may be stopped at a suitable horizontal stiffener.

7.10.2 Additional vertical stiffeners may be required on the bottom panels of the girder to resist docking pressures.

7.11 Lateral stability of primary members

7.11.1 Tripping brackets are generally to be fitted close to the toes of end brackets, in way of cross-ties and elsewhere, so that the spacing between brackets does not exceed the lesser of 4,5 m or 15 times the width of the face plate (20 times in the case of deck transverses). Arrangements in way of the intersections of primary members are to be such as to prevent tripping. A closer spacing of brackets may be required to be adopted with asymmetrical face plates.

7.11.2 To maintain continuity of strength, substantial horizontal and vertical brackets are to be fitted to transverses or stringers at ends of cross-ties. Horizontal brackets are to be aligned with the cross-tie face plates, and vertical end brackets are to be aligned with the cross-tie web.

7.11.3 Tripping brackets are to be connected to the face plate of the bottom transverses. Elsewhere, other than for docking girders, the bracket is to be connected to the face plate whenever the unsupported width of the latter exceeds 150 mm. Where the width of symmetrically placed face plates exceeds 400 mm, a small bracket is to be fitted opposite, and in line with, the tripping bracket. Equivalent support arrangements are to be provided for cross-tie face plates. Particular attention is to be paid to the support of continuous face plates in way of the radius at toes of brackets.

7.11.4 Wide face plates may require additional support between brackets.

7.11.5 In the fore peak tank, if the angle to the normal of the shell plating and the vertical webs exceeds 20°, double tripping brackets are to be fitted to the web at about midspan, but in no case greater than 3,0 m apart.

7.12 Openings in web plating

7.12.1 Where openings are cut in the webs of primary supporting members, the greatest dimension of the opening is not to exceed 20 per cent of the web depth. The opening is to be located so that the edges are not less than 40 per cent of the web depth from the face, and are equidistant from the corners of notches for frames or stiffeners. Openings are to be suitably framed where required.

7.12.2 Lightening holes are not to be cut in horizontal girders on the ship's side and longitudinal bulkheads, in symmetrical webs nor in side transverses and vertical webs in way of cross-ties and their end connections.

7.12.3 Holes cut in primary longitudinal members within 0,1*D* of the deck and bottom are, in general, to be reinforced as required by Ch 9,4.10. Access holes may be cut in deep transverses and girders with suitable compensation to provide satisfactory resistance to deflection and shear buckling in the web.

7.12.4 All holes are to have smooth edges and are to be kept well clear of notches and the toes of brackets.

7.12.5 Small air and drain holes cut in primary members are to be kept clear of the toes of brackets and are to be well rounded with smooth edges. Where holes are cut in primary longitudinal members of higher tensile steel, they are to be elliptical or equivalent to minimize stress concentration.

7.12.6 Where holes are cut for heating coils, the lower edge of the hole is to be not less than 100 mm from the inside of the shell plating. Where large notches are cut in the transverses for the passage of longitudinal framing, adjacent to openings for heating coils, the longitudinal notches are to be collared. Examination of the buckling strength of the web plate panel between notches for longitudinals may be required.

7.13 Brackets connecting primary members

7.13.1 The requirements of Ch 9,10.13 are also applicable to small conventional single hull tankers.

7.14 Arrangements at intersections of continuous secondary and primary members

7.14.1 For details and connections of collars, *see* Pt 3, Ch 10,5.2.

Section

1 **General**

2 **Materials and protection**

3 **Longitudinal strength**

4 **Hull envelope plating**

5 **Hull framing**

6 **Double bottom construction**

7 **Longitudinal bulkheads**

8 **Transverse bulkheads**

9 **Primary structure in wing tanks**

10 **Direct calculations**

11 **Forecastles**

■ *Section 1* General

1.1 Application

1.1.1 This Chapter applies to the arrangements and scantlings within the cargo region of sea-going ore carriers, intended for the carriage of ore in centre holds.

1.1.2 The requirements of Chapter 9 are to be applied to ore carriers, except as required by the provisions of this Chapter.

1.1.3 The scantlings of structural items may be determined by direct calculation. Where the length of the ship exceeds 150 m, certain scantlings will be required to be assessed by direct calculation. In such cases, the calculations are to be submitted for approval.

1.1.4 The additional requirements for ore-carriers for the alternate carriage of oil cargo and dry bulk cargo are given in Pt 4, Ch 9,11.

1.2 Structural configuration and ship arrangement

1.2.1 The requirements contained in the Chapter apply to single deck ships with machinery aft, having two longitudinal bulkheads and a double bottom throughout the centre hold. A typical cross section is indicated in Fig. 11.1.1.

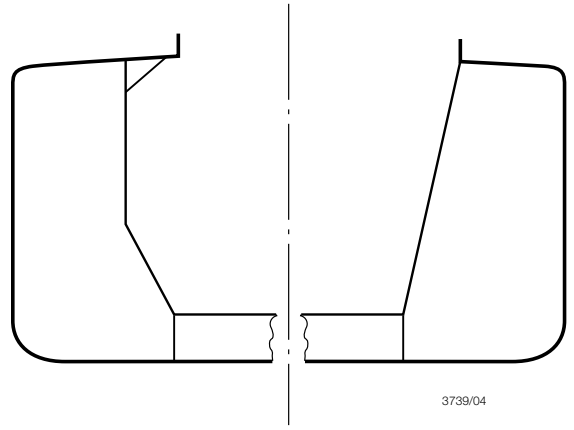

Fig. 11.1.1 Typical cross section

1.2.2 The bottom, and the deck outside the line of ore hatchways, are to be framed longitudinally within the cargo region. The side shell and longitudinal bulkheads are generally to be framed longitudinally where the length of the ship exceeds 150 m, but alternative proposals will be specially considered. Inside the line of openings, the deck is to be transversely framed.

1.3 Class notation

1.3.1 Sea-going ships complying with the requirements of this Chapter and other relevant Rule requirements for the draught required, will be eligible to be classed **100A1 ore carrier, ESP**.

1.3.2 The notation **ESP** serves to identify the ship as being subject to an Enhanced Survey Programme as detailed in Pt 1, Ch 3,3 and Ch 3,6, *see also* Pt 1, Ch 2,2.3.12.

1.3.3 The Regulations for classification and the assignment of class notations are given in Pt 1, Ch 2,2.

1.4 Symbols and definitions

1.4.1 The following symbols and definitions are applicable to this Chapter unless otherwise stated:

L, B, D, T as defined in Pt 3, Ch 1,6.

b = the width of plating supported by the primary member, in metres or mm

h = the load head, in metres, applied to the item under consideration

k = higher tensile steel factor. For the determination of this factor, *see* Pt 3, Ch 2,1. For mild steel k may be taken as 1,0

l_e = effective length of primary or secondary member, in metres, *see* Pt 3, Ch 3,3

s = spacing, in mm, of secondary members

Z = the section modulus, in cm^3, of the primary or secondary member, in association with an effective width of attached plating determined in accordance with Pt 3, Ch 3,3.

1.4.2 The expression 'primary member' as used in this Chapter is defined as a girder, transverse, vertical web, stringer, cross tie, buttress or double bottom floor. 'Secondary members' are supporting members other than primary members.

■ *Section 2* Materials and protection

2.1 Materials and grades of steel

2.1.1 Materials and grades of steel are to comply with the requirements of Pt 3, Ch 2.

2.2 Corrosion protection coating for salt water ballast spaces

2.2.1 The requirements of Pt 3, Ch 2,3.6 are to be complied with.

■ *Section 3* Longitudinal strength

3.1 General

3.1.1 The longitudinal strength standard is to comply with the relevant requirements of Pt 3, Ch 4.

■ *Section 4* Hull envelope plating

4.1 General

4.1.1 The requirements for hull envelope plating as given for oil tankers in Ch 9,4 are to be applied, except as provided for in this Section.

4.2 Deck plating in way of ore hatchways

4.2.1 The arrangement and scantlings of deck plating inside the line of ore hatchways and in way of ore hatchway corners are to be in accordance with the requirements for bulk carriers given in Ch 7,4.

4.3 Hatchways

4.3.1 The scantlings of the cargo hold hatch coamings are to comply with Pt 3, Ch 11,5 and the cargo hold hatch covers with Pt 3, Ch 11,2 and Pt 4, Ch 7,12.

4.4 Hatch coamings

4.4.1 The height and construction of hatch coamings are to comply with Pt 3, Ch 11,5 and Pt 4, Ch 7,13.

■ *Section 5* Hull framing

5.1 General

5.1.1 The framing requirements given for oil tankers in Ch 9,5 are to be applied, except as provided for in this Section.

5.2 Symbols

5.2.1 The symbols used in this Section are defined as follows:

h = load height, in metres, on the weather deck for primary and secondary members between ore hatchways
= 1,8 for secondary members forward of 0,075L from F.P.
= 4,2 + 2,04E for primary members forward of 0,075L from F.P.
= 1,5 between 0,075L and 0,12L from F.P.
= 1,2 + 2,04E elsewhere

where

$E = \dfrac{0{,}0914 + 0{,}003L}{D - T} - 0{,}15$ but not to be greater than 0,147

K_1 = 1,6 in the forward 0,12L
= 1,06 elsewhere

K_2 = 0,00054 in the forward 0,075L
= 0,00033 elsewhere.

5.2.2 Other symbols are defined in 1.4.

5.3 Bottom longitudinals in double bottom tanks

5.3.1 The section modulus of bottom longitudinals in the double bottom in the centre hold is to satisfy the requirements of Table 1.6.1 in Chapter 1.

5.3.2 In general, the span of longitudinals in the double bottom in the centre hold is not to exceed 2,5 m or 0,01L, whichever is the greater, and the span in the wing tanks is not to exceed the greater of 3,6 m or 0,02L.

5.4 Deck structure in way of centre hold

5.4.1 Where the hatch coamings are situated inboard of the longitudinal bulkhead, the deck between the two is to be fitted with suitably supported longitudinals complying with Ch 9,5.

5.5 Primary and secondary members inside line of ore hatchways

5.5.1 The section modulus of secondary members between hatches is to be not less than:

$$Z = k\,(K_1\,T\,D + K_2\,h\,B\,l_e^2\,s)\ \text{cm}^3$$

but need not exceed twice the value given by the second term within the brackets in the formula.

5.5.2 The section modulus of primary members between hatches is to be not less than:

$$Z = 5{,}46k\,b\,h\,l_e^2\ \text{cm}^3$$

Forward of 0,075*L* from the forward perpendicular, the depth of the primary member is to be not less than twice that of the secondary member supported.

5.5.3 Particular attention is to be paid to the scarfing of deck beams into the structure outside the line of openings. Substantial brackets or equivalent arrangements are to be provided.

■ *Section 6* Double bottom construction

6.1 General

6.1.1 The double bottom depth and scantlings are to be as required by Ch 7,8 for the double bottom structure of a bulk carrier to which the notation 'strengthened for heavy cargoes' is to be assigned. The required depth of double bottom and scantlings of double bottom structure are, however, to be verified by direct calculation. The calculation is to be submitted.

6.1.2 Where the proposed depth of double bottom exceeds 1,5 times the Rule minimum depth given in Ch 1,8, the scantlings of the floors and girders may be required to be increased to ensure adequate resistance to buckling.

6.1.3 The thickness of inner bottom plating in the cargo hold is to be not less than required by Ch 7,8 for ships having the notation 'strengthened for heavy cargoes'. The requirements of Ch 7,8.1 relating to discharge by grabs are to be applied.

6.2 Arrangement

6.2.1 In way of the cargo hold a centreline girder is to be fitted and side girders spaced not more than 3,8 m apart are generally to be arranged in way of transverse bulkheads. The side girders are to extend at least to the first plate floor adjacent to the bulkhead each side. The outboard side girder is to be continuous, forming the lower part of the longitudinal bulkhead.

6.2.2 Plate floors are to be fitted in line with each transverse in the wing tanks and in way of transverse bulkhead stools. Additional floors are to be so arranged that the spacing of floors does not exceed 2,5 m or 0,01*L*, whichever is the greater.

6.2.3 Attention is to be given to structural continuity and alignment between double bottom structure and transverses in wing tanks, *see also* 9.2.

6.2.4 Alternative arrangements will be considered on the basis of the results of direct calculations.

■ *Section 7* Longitudinal bulkheads

7.1 General

7.1.1 The requirements for longitudinal oiltight bulkheads given in Ch 9,6 and Ch 9,9 are to be applied, together with the additional requirements of this Section.

7.1.2 Longitudinal bulkheads on ore carriers are to be plane with rolled or fabricated longitudinal stiffeners. The bulkhead may be sloped to form a hopper shape in the lower part of the hold or over its full depth.

7.1.3 Where the upper part of the bulkhead is vertical and the lower part sloped to form a hopper shape, the thickness of the bulkhead plating in way of the knuckle may be required to be increased to resist transverse compressive buckling stresses. The knuckle is to be arranged in way of a longitudinal.

7.1.4 The thickness of the lowest strake of sloped bulkhead plating is also to comply with inner bottom requirements as given in 6.1.3. Where this provision results in an increase in thickness, the latter may be gradually tapered above the lowest strake to the required longitudinal bulkhead thickness at the position of the knuckle, or at a point one-third of the depth of the bulkhead above the inner bottom, whichever is the lower.

■ *Section 8* Transverse bulkheads

8.1 General

8.1.1 Where the form of construction used for transverse bulkheads in wing tanks is different from that used in centre holds, arrangements are to be made to ensure continuity of transverse strength through the longitudinal bulkhead.

8.2 Transverse watertight bulkheads in wing tanks

8.2.1 The requirements for transverse bulkhead plating, stiffening and primary structure given in Ch 1,9 for deep tank bulkheads are to be applied.

8.3 Transverse watertight bulkheads in centre holds

8.3.1 The requirements for transverse hold bulkheads given for the carriage of dry bulk cargoes in Ch 7,10 are to be applied.

8.3.2 In general, the bulkheads are to have stiffening or corrugations arranged vertically, supported by top and bottom end stools. Alternative arrangements will, however, be considered.

8.4 Non-watertight bulkheads

8.4.1 Non-watertight bulkheads in wing tanks are to comply with the requirements given in Ch 9,8 and Ch 9,9.8.

8.4.2 The bulkhead plating is to be suitably reinforced in way of double bottom scarfing arrangements and the ends of centre hold deck transverses. Openings in wing tank bulkheads are to be kept clear of these areas.

■ *Section 9* Primary structure in wing tanks

9.1 General

9.1.1 The primary structure in the wing tanks is to comply with the requirements given in Ch 9,9.

9.2 Scarfing of double bottom

9.2.1 The inner bottom plating is to be extended into the wing tank in the form of a horizontal diaphragm, arranged to ensure a smooth structural transition in way of transverse primary members and to maintain longitudinal continuity. The diaphragms are to be of sufficient width to provide effective scarfing of the inner bottom into the wing tank structure.

9.2.2 Floors intermediate between transverses are to be backed in the wing tanks by substantial vertical brackets extending transversely over at least three bottom longitudinal spaces and vertically to a sufficient height above the horizontal diaphragms to provide effective support for the double bottom structure.

■ *Section 10* Direct calculations

10.1 Application

10.1.1 Direct calculations are to be employed in the derivation of scantlings where required by the preceding Sections of this Chapter or by related provisions included in Part 3.

10.1.2 Direct calculation methods are also generally to be used where additional calculations are required by the Rules in respect of unusual arrangements.

10.1.3 For complex structural arrangements, e.g. a double plate transverse bulkhead with stool in a centre hold, associated with plane wing tank bulkheads supported by stringers and buttresses, an investigation of bottom primary structure over a full cargo hold length and three-dimensional analysis of the transverse bulkhead structure will generally be required, taking account of applied longitudinal hull bending effects.

10.1.4 The cross-deck structure is to be verified as being capable of supporting transverse compressive stresses resulting from lightship weight, cargo weight and inertia, hydrostatic and wave loads. The cross-deck structure is to comprise the hatch coamings and beams, the plating and attached stiffeners and the upper stool. Non-corrugated bulkhead plating may also be included.

10.2 Procedures

10.2.1 For details of Lloyd's Register's (hereinafter referred to as LR) direct calculation procedures, *see* Pt 3, Ch 1,2. For requirements concerning use of other calculation procedures, *see* Pt 3, Ch 1,3.

10.2.2 Where appropriate to the structural configuration, the direct calculation procedures for tanker primary structure, *see* Ch 9,14, will be adapted for application to ore carriers.

■ *Section 11* Forecastles

11.1 General

11.1.1 A forecastle is to be fitted in accordance with the requirements of Pt 4, Ch 7,14.

Section

1 **General**

2 **Longitudinal strength**

3 **Deck structure**

4 **Shell envelope plating**

5 **Shell envelope framing**

6 **Bottom structure**

7 **Bottom strengthening for operating aground**

8 **Spoil space and well structure**

9 **Watertight bulkheads**

10 **Exposed casings**

11 **Dredging machinery seats and dredging gear**

12 **Ladder wells**

13 **Fenders**

14 **Rudders**

15 **Spoil space weirs and overflows**

16 **Scuppers and sanitary discharges and side scuttles**

17 **Split hopper dredgers and barges**

18 **Direct calculations**

■ *Section 1* General

1.1 Application

1.1.1 This Chapter applies, in general, to manned or unmanned self-propelled or non-self-propelled ships defined as follows:

(a) Dredgers designed to operate wholly or generally for the purpose of raising spoil such as mud, silt, gravel, clay, sand or similar substances, general rubbish or ore, minerals, etc., for the bed of the sea, rivers, lakes, canals or harbours, etc. The dredged material may be placed in suitably designed holds or similar spaces within the ship.

(b) Hopper dredgers, designed to raise spoil, as described in (a), and so arranged that the dredged material may be placed in one or more hoppers within the ship. For the purpose of this definition, a hopper is a hold or other space designed to carry dredged spoil and also arranged to enable such spoil to be discharged through doors or valves in the bottom of the ship. Spaces arranged to be unloaded by means of conveyor belts, suction pipes or similar gear are not to be regarded as hoppers unless adequate bottom doors or valves are also fitted.

(c) Split hopper dredgers, which are designed similarly to that described in (b) but arranged such that the spoil is discharged through the bottom of the ship by means of the split hull being separated using hinges and actuating devices.

(d) Reclamation craft, reclamation ships, etc., which work in a manner similar to dredgers but draw their spoil from dredging craft and discharge it ashore.

(e) Hopper barges designed to carry spoil or dredged material in hoppers within the ship. For the definition of a hopper, *see* 1.1.1(b).

(f) Split hopper barges, which are designed similarly to that described in (e) but arranged such that the spoil is discharged through the bottom of the ship by means of the split hull being separated using hinges and actuating devices.

1.1.2 The scantlings and arrangements are to be as required by Chapter 1, except as otherwise specified in this Chapter.

1.1.3 Where bottom dump doors or valves are fitted, hatch covers are not required. Proposals for the omission of hatch covers where bottom dump doors or valves are not fitted will be specially considered.

1.1.4 Ships which have their machinery placed on a shallow raft, rather than within a hull, will have their scantlings specially considered. Dredgers which resemble drilling rigs, or similar offshore structures, in their design or mode of operation will be considered under the Rules for such structures.

1.1.5 Ships of unusual form or proportions, or intended for unusual dredging methods, will receive individual consideration on the basis of the general standards of the Rules.

1.1.6 The requirements provide for transverse and longitudinal framing of the structure. In general, the midship region scantlings are to extend over the full length of hoppers and holds. The extent is to be not less than 0,4*L* amidships, and may need to be increased if the design and loading conditions of a particular ship result in its maximum bending moment occurring other than at amidships.

1.2 Stability

1.2.1 Attention is drawn to the thixotropic properties of certain types of dredged material which, as a result of the ship's motions, can cause the spoil to shift within spoil spaces, resulting in undesirable changes in trim or angles of heel. This can be particularly dangerous in ships with closed top spaces.

1.3 Class notations

1.3.1 In general, ships complying with the requirements of this Chapter will be eligible for one of the following classes:

(a) **100A1 dredger**. This class will be assigned to ships as defined in 1.1.1(a).

(b) **100A1 hopper dredger**. This class will be assigned to ships as defined in 1.1.1(b).

(c) **100A1 split hopper dredger**. This class will be assigned to ships as defined in 1.1.1(c)

(d) **100A1 reclamation craft**. This class will be assigned to ships as defined in 1.1.1(d).

(e) **100A1 hopper barge**. This class will be assigned to ships as defined in 1.1.1(e).

(f) **100A1 split hopper barge**. This class will be assigned to ships as defined in 1.1.1(f).

1.3.2 These classes will be assigned to ships which are intended to make unrestricted sea-going voyages either as part of their work or while transferring from one work area to another as part of their normal operations. However, unrestricted sea-going service notations will not normally be assigned to bucket dredgers, nor to dredging and reclamation craft unless spoil spaces are provided with adequate hatch covers. Attention is drawn to the special requirements imposed by National Authorities involving loading limitations and stability requirements.

1.3.3 Ships intended to be operated only in suitable areas or conditions which have been agreed by the Committee, as defined in Pt 1, Ch 2,2.3.6, 2.3.7, 2.3.8 and 2.3.10, will receive individual consideration on the basis of the Rules with respect to the environmental conditions agreed for the design basis and approval. In particular, dredgers complying with the requirements of this Chapter, and Pt 3, Ch 13,7 for the reduced equipment requirements, will be eligible to be classed:

A1 dredger protected waters service, *see* Pt 1, Ch 2,2.3.6, or

100A1 dredger with service restriction notation,

whichever is applicable. Hopper dredgers, split hopper dredgers, reclamation craft, hopper barges and split hopper barges would be considered similarly.

1.3.4 Where a ship complying with the requirements of this Chapter has the bottom structure additionally strengthened for operating aground in accordance with Section 7, it will be eligible for the special feature notation 'bottom strengthened for operating aground'.

1.3.5 In addition to the above notations, an appropriate descriptive note may be entered in the *Register Book* indicating the type of dredging or reclamation craft (*see* Pt 1, Ch 2,2.6.1), e.g. 'trailing suction dredger', 'cutter suction dredger', 'bucket dredger', 'grab dredger', 'dipper dredger', 'self-discharging sand dredger', etc.

1.3.6 The Regulations for classification and assignment of class notations are given in Pt 1, Ch 2 to which reference should be made.

1.4 Information required

1.4.1 In addition to the information and plans required by Pt 3, Ch 1,5 details of the following are to be submitted:

- Sections through hoppers, wells, pump-rooms and dredging machinery spaces.
- Hopper, hold and well bulkheads and associated weirs.
- Scarfing arrangements at hopper, hold and well ends.
- Hinges, actuating and locking arrangements, together with supporting structure, weld connection details and calculations of design forces for split hull separation devices.
- Deckhouse and deckhouse support structure.
- Outline arrangement and main scantlings of 'A' frames, gantries, positioning spuds, hopper doors and similar items, the strength and integrity of which directly affect the hull structure of the vessel. Support structure in way of 'A' frames, positioning spuds and other dredging structures. Seats of dredging machinery and pumps. If dredging equipment is stored during voyages, plans of any special arrangements for dismantling, storage and reassembly. Sufficient particulars of static and dynamic loading for these items are to accompany the details to enable verification of the strength and effectiveness of the supporting ship structure.
- A full set of stability data which is to be placed on board the ship, *see* Pt 1, Ch 2,3.
- Calculations of hull girder still water bending moment and shear force where applicable, *see* 2.1.1, for the proposed loading conditions, including densities of spoil. When the still water bending moment and block coefficient are being calculated, any water within spoil spaces should be regarded as added weight, whilst that in dredging ladder wells and spud wells should be regarded as lost buoyancy.

1.5 Symbols

1.5.1 The following symbols and definitions are applicable to this Chapter unless otherwise stated:

B = breadth, in metres, defined as the greatest moulded breadth excluding any localized bulge on the hull associated with the attachment or handling of the dredging gear

C_b = the moulded block coefficient at draught T but is to be taken as not less than 0,6. The block coefficient is to be determined using the length, L. Spoil spaces should be regarded as added weight, whilst dredging ladder wells and spud wells should be regarded as lost buoyancy

C_{bm} = the moulded block coefficient at the dredging draught T_m, but is to be taken as not less than 0,6. The block coefficient is to be determined using length, L. Spoil spaces should be regarded as added weight, whilst dredging ladder wells and spud wells should be regarded as lost buoyancy

D = moulded depth, in metres, to the uppermost continuous deck

L = Rule length, in metres, as defined in Pt 3, Ch 1,6 for ships classed for unrestricted service. For ships classed **A1 protected waters service** where the load waterline is not required to be determined by the International Load Line Convention method, the

length is to be measured on the deepest waterline at which the ship is designed to operate. On sea-going vessels with unusual stern arrangement, or with unusual bow arrangement associated with a dredging draught in excess of the summer load line draught, the length, L, will be specially considered

M_s = design still water bending moment, in kNm (tonne-f m), at draught, T, or less

$\overline{M}_s$ = maximum permissible still water bending moment, in kNm (tonne-f m), at draught, T, or less

M_{sm} = design still water bending moment, in kNm (tonne-f m), under dredging conditions at draught, T_m

$\overline{M}_{sm}$ = maximum permissible still water bending moment, in kNm (tonne-f m), under dredging conditions at draught, T_m

M_w = design hull vertical wave bending moment amidships, in kN m (tonne f m), *see* 2.4.1

T = summer draught, in metres, as established by the method described in the International Load Line Convention, measured from top of keel amidships

T_m = maximum dredging draught, in metres, at which the ship is designed to operate. It is to be measured amidships from the top of keel and is to be taken not less than T, *see* 15.1.4

ρ = relative density (specific gravity) which, in general, is to be taken not less than 1,86, or as derived from the stowage rate of spoil. This stowage rate of dredged spoil is to be determined from the maximum spoil weight at dredging draught and volume of spoil space up to the sill of the uppermost overflow weir. The value used in the calculations of scantlings is to be clearly marked on the relevant plans

Hogging bending moments are positive.

1.5.2 For symbols not defined in this Chapter, *see* Chapter 1.

■ *Section 2* Longitudinal strength

2.1 General

2.1.1 Longitudinal strength calculations are to be made in accordance with the relevant requirements given in Pt 3, Ch 4, except as indicated in this Section.

2.2 Loading conditions

2.2.1 Details are to be submitted of the following loading conditions for examination of longitudinal strength:

(a) Homogeneous load conditions (including details of densities of spoil) for both departure and arrival at draught, T, and maximum dredging draught, T_m, where this exceeds T, *see also* 15.1.4.

(b) Part loaded conditions (including details of densities of spoil) and ballast conditions for both departure and arrival.

(c) Any specified non-homogeneous load conditions.

2.2.2 If any dredging equipment has to be unshipped, lowered or otherwise specially arranged or stowed before the ship proceeds on a sea-going voyage, this fact is to be indicated on the longitudinal strength information required to be submitted and is also to be clearly stated in the final Loading Manual supplied to the ship.

2.2.3 For loading conditions, and any other preparations required to permit ships with a notation specifying some service limitation to undertake a sea-going voyage, either from port or building to service area or from one service area to another, *see* Pt 1, Ch 2,1.

2.2.4 Where a ship is arranged with two spoil spaces account is to be taken in the calculation of the still water bending moment of either one of these spaces being empty, unless such loading is specifically precluded in the Loading Manual supplied to the ship.

2.2.5 The requirements of Pt 3, Ch 4,8.3 regarding loading instruments are not applicable to dredging and reclamation craft.

2.3 Hull bending strength

2.3.1 Hull bending strength standards are to comply with the relevant requirements of Pt 3, Ch 4, taking account of the contents of 2.4 and 2.5.

2.3.2 For split hopper dredgers or barges, due account is to be taken of the lateral forces and moments on each half hull which are exerted by the pressure of the spoil and dynamic wave loading, *see* 17.2.

2.4 Design vertical wave bending moments

2.4.1 The design vertical wave bending moment at amidships, M_w, is to be determined from Pt 3, Ch 4,5.2 with the ship service factor, f_1, given in Table 12.2.1.

Table 12.2.1 Ship service factor f_1

f_1		
'100A1'	'100A1 extended protected waters service'	'A1 protected water service'
0,75	0,70	0,65

2.4.2 The design hull vertical wave bending moment at amidships for dredging conditions, M_{wd}, where draught T_m exceeds T, is given by the following expression:

$$M_{wd} = 0{,}56 f_2 M_{wo}$$

where

M_{wo} is determined from Pt 3, Ch 4,5.2, using C_{bm} in place of C_b and f_2 is given in Pt 3, Ch 4,5.2.

2.5 Permissible still water bending moment for dredging conditions

2.5.1 The maximum permissible still water bending moment, $\overline{M}_{sm}$, for dredging conditions where draught T_m exceeds T is not to exceed:

$$\left|\overline{M}_{sm}\right| = \left|\overline{M}_s + f_1 f_2 M_{wo} - M_{wd}\right| \quad \text{kN m (tonne-f m)}$$

where M_{wd} is defined in 2.4.2.

Where applicable, the relevant loading conditions are to be included in the final Loading Manual, *see* 15.1.4 and Pt 3, Ch 4,8.1.

2.6 Calculation of hull section modulus

2.6.1 The hull midship section modulus is to be calculated in accordance with the requirements of Pt 3, Ch 3,3.4 taking account of 2.6.2 and 2.6.3. *See also* 17.1 for split hull arrangements.

2.6.2 Centreline box keels within the hopper spaces may normally be regarded as 100 per cent effective provided that they are effectively scarfed to the vertical keels or equivalent structure at each end of the hopper spaces.

2.6.3 Where a long superstructure or deckhouse is fitted extending within the midship region, the requirements for longitudinal strength in the hull and erection will be specially considered.

2.7 Hull shear strength

2.7.1 Special attention is to be paid to the actual shear forces at the spoil space end bulkheads. The inclusion of the effective thickness of longitudinal bulkheads, centre box keel plating and other longitudinal material at these positions, will be considered in relation to the arrangement of structure proposed.

2.7.2 For ships classed **A1 protected waters service**, *see* 4.6.1.

■ *Section 3* Deck structure

3.1 Deck plating

3.1.1 Dredgers, hopper dredgers and hopper barges classed for unrestricted service are to have the minimum thicknesses required by Ch 1,4 increased by 2 mm for those areas of the strength deck outside line of openings which are exposed to the weather.

3.1.2 Ships classed **100A1 extended protected waters service** are to have the minimum thicknesses required by Ch 1,4 for all strength deck plating outside line of openings. The minimum value of s, used in the formulae may be taken as 550 mm.

3.1.3 Ships classed **A1 protected waters service** may have the minimum thicknesses as given in Ch 1,4 for all strength deck plating outside line of openings reduced by 1 mm, with an overall minimum of 5 mm. The minimum value of s, used in the formulae may be taken as 550 mm.

3.1.4 Strength deck plating within the line of openings in the midship region, and for 0,075L from the ends, is to have a thickness not less than:

$$t = 0{,}01s \text{ mm}$$

3.1.5 The deck plating thickness and supporting structure may be required to be reinforced in those areas of deck which are liable to be subjected to regular, heavy, impact loads such as could occur when maintaining or inspecting large items of dredging gear, etc. It is recommended that consideration be given to increasing the plating thickness in these areas to:

$$t = 0{,}02s \text{ mm}$$

with a minimum

$$t = 10 \text{ mm}$$

3.2 Deck stiffening

3.2.1 The scantlings of deck beams or longitudinal are to comply with the requirements of Ch 1,4.3.

3.3 Deck supporting structure

3.3.1 The scantlings of the deck supporting structure are to comply with the requirements of Ch 1,4.4.

■ *Section 4* Shell envelope plating

4.1 Keel

4.1.1 On ships over 50 m in length, where there is a centreline well, or where hopper doors are fitted on the ship's centreline, i.e. where no centreline box keel is fitted in a hopper, a keel strake is to be fitted on each side of the well or hopper door opening, dependent upon the proposed docking arrangements for the ship. The width of each keel strake is to be not less than half that required for a centreline keel nor less than 400 mm. The thickness of each keel strake is to be not less than the thickness required for a centreline keel in Ch 1,5.2.

4.2 Bottom shell

4.2.1 The minimum thickness of bottom shell plating amidships on hopper dredgers and hopper barges classed for unrestricted service is to be 15 per cent greater than that required by Ch 1,5.3. The thickness of bottom shell plating on ships classed **A1 protected waters service** is to be not less than:

$$t = \left(5sL\sqrt{D} \times 10^{-5} + 5\right) \text{ mm}$$

or that required for Ch 1,5.3 whichever is the lesser, but with an overall minimum thickness of 6 mm.

4.2.2 Where hoppers extend outside 0,4*L* amidships, the thicknesses required for the bottom shell amidships are to be maintained for at least two frame spaces beyond the ends of the hoppers before being tapered to the end thicknesses.

4.3 Operating aground

4.3.1 For ships intended to operate aground, *see* Section 7.

4.4 Bottom openings

4.4.1 The corners of hopper door openings and of bucket and ladder wells are generally to be parabolic or elliptical on all ships where *L* is greater than 50 m, and should generally be rounded on smaller ships. On ships where *L* is greater than 90 m, the arrangement of hopper and well corners within 0,5*L* amidships should generally be as required for deck hatch corners. The sealing arrangements for hopper doors may lie within the line of the corners, provided that the construction is such as to avoid high stress concentrations in the structure.

4.5 Ships with chines

4.5.1 On ships arranged with two chines each side, the bilge plating should generally be calculated from the bottom plating formulae. On hard chine ships, flanged chines will not generally be approved, but where a chine is formed by knuckling the shell plating, the radius of curvature, measured on the inside of the plate, is to be not less than 10 times the plate thickness. Where a solid round chine bar is fitted, the bar diameter is to be not less than 50 mm or three times the thickness of the thickest abutting plate whichever is the greater. Where welded chines are used, the welding is to be built up as necessary to ensure that the shell plating thickness is maintained across the weld.

4.6 Side shell

4.6.1 The thickness of the side shell is to be in accordance with Ch 1,5.4. On ships classed **A1 protected waters service** the thickness of the side shell throughout, including at ends, may be reduced 20 per cent from that required by Ch 1,5.4 and Pt 3, Ch 5 and Pt 3, Ch 6 as appropriate, provided that the combined shear stress does not exceed 110 N/mm^2 (11,2 kgf/mm^2).

4.6.2 Where high compressive loads occur in the sheerstrake, the thickness may be required to be increased to minimize the likelihood of buckling.

4.7 Swim ends

4.7.1 The plating of swim ends is to have a thickness not less than that required for the bottom shell up to the waterline at draught *T*, *see also* Table 12.7.1. It is to have a thickness not less than that required for side shell in the areas more than 1 m above the waterline at draught T_m. In intermediate areas the thickness may be tapered from the bottom to the side shell requirements.

■ *Section 5*
Shell envelope framing

5.1 Longitudinal stiffening

5.1.1 The scantlings of bottom and side shell longitudinals are to comply with the requirements given in Table 12.5.1.

5.1.2 For ships intended to operate aground, *see* Section 7.

5.2 Transverse stiffening

5.2.1 For bottom structure with transverse framing, *see* Section 6.

5.2.2 For ships intended to operate aground, *see* Section 7.

5.2.3 The scantlings of side frames amidships are to be in accordance with Ch 1,6 for ships classed for unrestricted service or **100A1 extended protected waters service**. The modulus of side frames may be reduced by eight per cent for ships classed **A1 protected waters service**.

5.3 Primary supporting structure at sides

5.3.1 The spacing of transverses supporting side longitudinals is generally to be in accordance with Ch 1,6.4, but is not to exceed 4,0 m.

5.3.2 Transverses supporting side longitudinals are to comply with the requirements of Ch 1,6.4, except for ships classed with a service restriction notation and all ships classed **A1 protected waters service**, where the requirements are given in Table 12.5.2.

5.3.3 In way of transverse framing, web frames may be required in way of hopper cross members. Alternative arrangements may be submitted for consideration.

Table 12.5.1 Longitudinal stiffening

Position of longitudinals	Modulus
(1) Bottom	$Z = \frac{l_e^2 s H}{K_1} c$ cm^3 where l_e = effective span of longitudinals, in metres, and is to be taken as not less than 1,85 m except as provided for in 6.3.1 In way of single bottoms $H = D$ In way of double bottoms $H = D$ on ships classed **100A1** or **100A1 extended protected waters service** $= T_m$ for ships classed **A1 protected waters service** c = a factor varying from 1,0 at $\frac{D}{2}$ to $\frac{2060}{3620 - 1560F_B}$ at bottom, intermediate values by interpolation. For ships with hogging still water bending moments in loaded conditions and for split hull vessels, $c = 1,0$ F_B = as defined in Pt 3, Ch 4,5.1 K_1 = 120 on ships classed **100A1** or **100A1 extended protected waters service** = 150 on ships classed **A1 protected waters service**
(2) Side shell	(a) For ships classed **100A1** or **100A1 extended protected waters service** The minimum modulus of side longitudinals is to be in accordance with Ch 1,6.2 (b) For ships classed **A1 protected waters service** The modulus required by (a) and reduced by 5 per cent
(3) Bilge	The scantlings of bilge longitudinals are to be graduated between those required for the bottom longitudinals and the lowest side longitudinals

5.3.4 The end connections of side transverses and web frames to deck and bottom transverses abreast of spoil spaces are to be arranged to prevent shear buckling of the members' webs.

5.3.5 For wash bulkheads fitted in lieu of web frames abreast spoil spaces, *see* 8.3.6.

Table 12.5.2 Primary supporting structure at sides

Symbols	Item	Requirement
h = vertical distance from mid-point of span to deck at side, in metres l_e = effective length of supporting member, in metres, *see* Pt 3, Ch 3,3 I = moment of inertia of supporting member, in cm^4, *see* Pt 3, Ch 3,3 S = spacing, or mean spacing, of supporting member, in metres Z = section modulus of supporting member, in cm^3, *see* Pt 3, Ch 3,3	Transverses supporting side longitudinals amidships	All ships classed **100A1 extended protected waters service**: $Z = 9,5S\,h\,l_e^2$ cm^3 All ships classed **A1 protected waters service**: $Z = 9,0S\,h\,l_e^2$ cm^3
	Transverses and web frames supporting side longitudinals abreast of spoil spaces	Inertia of not less than: $I = 2,5 l_e Z$ cm^4

Section 6
Bottom structure

6.1 General

6.1.1 This Section provides for longitudinal or transverse framing of the bottom structure of ships with single or double bottoms.

6.1.2 For ships intended to operate aground, *see* Section 7.

6.2 Single bottoms transversely framed

6.2.1 The scantlings of single bottom floors, extending for the full width of the ship, are to be in accordance with Ch 1,7 irrespective of the length of the ship. Floors below dredging pumps or similar items which could induce large concentrated loads or large dynamic forces, may be required to be of increased strength. Floors may be recessed locally in way of dredging pumps, etc., provided that suitable compensation is arranged.

6.2.2 The spacing of intercostals and longitudinal side girders is to be such as to ensure continuity of strength at bulkheads, ends of spoil spaces and wells and at ends of machinery seats so far as practicable, *see also* Ch 1,7. An intercostal is to be fitted in the buoyancy space abreast hopper openings when the distance between the hopper opening and the ship's side exceeds 4,0 m.

6.2.3 Abreast of dredging wells and spoil spaces the minimum depth of floor at its inboard end is to be not less than:

$$d_w = 20\,(B + l_e + 2T_m) \quad \text{mm}$$

The thickness of the web and area of the face plate are to be as required by Ch 1,7.2.

6.3 Single bottoms longitudinally framed

6.3.1 The spacing of transverses is to be in accordance with 5.3.1, and are to be supplemented by the following arrangements of brackets:

(a) On the ship's centreline, or on each side of dredging wells where there is no structure on the centreline, the brackets are to be spaced not more than 1,25 m apart and are to extend outboard to the first longitudinal, port and starboard. The longitudinals supported by the brackets may be calculated using a nominal transverse spacing of 1,6 m.

(b) On ships where the sides are transversely framed, the brackets are to be fitted at every frame and are to extend inboard to the first longitudinal on the flat of bottom. This longitudinal is to be based on a span equal to the spacing of the transverses.

(c) The thickness of these intermediate brackets is to be not less than:

$$t = \left(0{,}25B + 1{,}85\sqrt{T_m}\right) \quad \text{mm}$$

6.3.2 In areas of high shear loading, the thickness and stiffening of the web plates on transverses, etc., may have to be increased. The depth of transverses is to be not less than 2,5 times the depth of the slot for the bottom longitudinals, and thickness of the web plates is to be not less than 8 mm.

6.3.3 Bottom transverses in spoil space side buoyancy tanks in way of cross ties are to have a depth, d, of not less than:

$$d = 28B + 205\sqrt{T_m} \quad \text{mm}$$

Their arrangement, scantlings and end connections are to be such as to provide proper continuity of strength across the ship. The transverses are to be fitted with stiffeners in way of every shell longitudinal. The stiffeners should, in general, be equivalent to flat bars with a depth one-eighth of the transverse at that point and a thickness not less than the thickness of the transverse.

6.4 Double bottom – General

6.4.1 Self-propelled dredgers and reclamation ships of more than 500 tons gross and intended for International voyages are to be provided with a double bottom extending from the collision bulkhead to the after peak bulkhead, as far as this is practicable and compatible with the design and proper working of the ship.

6.4.2 A double bottom need not be fitted in way of water-tight compartments used exclusively for the carriage of liquids provided the safety of the ship, in the event of bottom damage, is not thereby impaired.

6.4.3 The double bottom may, however, be interrupted locally, or fitted with wells in way of dredging pumps and other equipment. Where such openings are large, their scantlings and arrangements will be specially considered.

6.4.4 The scantlings are to be in accordance with Ch 1,8 except for the following:

(a) The Rule thickness of centre girders may be reduced by 2,0 mm on ships classed **A1 protected waters service**.

(b) The Rule thickness of side girders may be reduced by 1,0 mm on ships classed **100A1 extended protected waters service**.

(c) The scantlings of floors, longitudinals and plating supporting the bottom of spaces intended to carry spoil are to be determined in accordance with Section 8.

6.5 Double bottom with transverse framing

6.5.1 Plate floors may be fitted at every frame or may be spaced not more than 3,0 m apart with the shell and inner bottom plating between these floors supported by bracket floors. However, plate floors are to be fitted at every frame in the following areas:

(a) As required for Ch 1,8.5.

(b) Below spaces from which dredged material will be discharged by grabs.

(c) In main propulsion and dredging machinery rooms and in peak tanks.

(d) For three frame spaces at ends of spoil spaces and dredging wells.

6.6 Double bottom with longitudinal framing

6.6.1 In locations other than below spaces intended for dredged spoil the section modulus of inner bottom longitudinals is to be not less than:

$$Z = \frac{l_e^2\, s\, H}{K_1}\, c \quad \text{cm}^3$$

where

l_e = effective span of longitudinals, in metres, and is to be taken as not less than 1,85 m

s = spacing of longitudinals, in mm

H = height, in metres, from the tank top to the deck at side, (but need not exceed T_m on ships classed **A1 protected waters service**)

c as defined in Table 12.5.1

K_1 = 120 in machinery spaces on ships classed **100A1**
= 150 otherwise.

6.6.2 The section modulus of longitudinals below spaces intended for dredged spoil is to comply with the requirements of 8.3.7.

6.6.3 The spacing of transverses is generally to be as for dry cargo ships but is not to exceed 4,0 m. Below main dredging machinery the transverses are generally to be spaced not more than 1,0 m apart.

6.6.4 The ends of longitudinal girders under dredging machinery are to be tapered off or efficiently scarfed into other longitudinal structural items.

■ *Section 7* Bottom strengthening for operating aground

7.1 Application

7.1.1 The scantlings of bottom structure are to comply with the requirements given in Table 12.7.1.

7.1.2 Unless otherwise specified by the Owner, it should be assumed that non-self-propelled dredging and reclamation craft are to operate aground.

Table 12.7.1 Bottom strengthening for operating aground

Item	Requirement	
The following requirements are to be applied to the bottom structure upon which the ship is likely to be supported whilst aground		
(1) Bottom shell, keel and swim end plating	Thickness to be increased by 20% over the minimum requirements of Ch 1,5, with a minimum of 8 mm	
(2) Bottom longitudinals	Scantlings as required by Table 12.5.1(1) taking K_1 = 74 and c = 1,0	
(3) Bilge longitudinals (where fitted)	Scantlings to be the same as bottom longitudinals	
	Transverse framing	Longitudinal framing
(4) Primary stiffening in way of single bottoms, *see* Notes 1 and 2	(a) Floors to be fitted at every frame with vertical stiffeners spaced, in general, not more than 1,25 m apart (b) Side girders to be spaced not more than 2,2 m apart and intermediate 100 mm x 10 mm bulb plate longitudinals, or equivalent, fitted	(a) The spacing of transverses or floors is, in general, not to exceed 2,5 m outboard of wells or 1,85 m elsewhere (b) The panel size nearest the shell plating of web plates of transverses or floors is, in general, not to exceed 80*t* x 80*t* where *t* is the actual web thickness (c) Side girders to be spaced not more than 2,2 m apart
(5) Primary stiffening in way of double bottoms, *see* Notes 1 and 2	(a) Plate floors are to be fitted at every frame with vertical stiffeners spaced, in general, not more than 1,25 m apart (b) Side girders to be spaced not more than 2,5 m apart and intermediate 100 mm x 10 mm bulb plate longitudinals, or equivalent, fitted (c) Where the span of floors between a hopper space and the ship's side exceeds 3,75 m, a longitudinal girder is to be fitted	(a) The spacing of plate floors is, in general, not to exceed 1,85 m (b) Side girders to be spaced not more than 2,5 m apart
NOTES 1. The scantlings of floors, girders and transverses are to be determined in accordance with the requirements of Section 6. 2. The number and size of holes in floors, girder and transverses are to be kept to a minimum, *see* Ch 1,8.		

■ *Section 8*
Spoil space and well structure

8.1 Symbols and definitions

8.1.1 The symbols used in this Section are defined as follows:

h = load head, in metres, measured vertically as follows:

(a) For plating, the distance from a point one-third of the height of the plate above its lower edge to the sill of the uppermost overflow weir.

(b) For stiffeners or girders, the distance from the middle of the effective length to the sill of the uppermost overflow weir.

l_e = effective length of stiffening members, in metres, *see* Pt 3, Ch 3,3

s = spacing of stiffeners, in mm

t = plate thickness, in mm

A_1 = cross-sectional area of flange or stiffener, in cm^2, including coaming plating.

8.1.2 Other symbols are defined in 1.5.1.

8.2 General

8.2.1 This Section provides for:

(a) horizontally and vertically stiffened boundary bulkheads to hoppers, and holds intended for dredged spoil, to ladder wells and to spud wells,

(b) protection against flooding in the event of the ladder well or adjacent bottom plating being damaged by objects dredged up by bucket dredgers, and

(c) continuity of transverse strength in spoil spaces and wing tanks abreast of spoil spaces.

8.2.2 As an alternative to the requirements of this Section regarding primary structure, scantlings may be derived on the basis of direct calculation methods, *see* Section 18.

8.2.3 **Continuity of strength.** Arrangements are to be made to ensure continuity of strength at the ends of longitudinal and well side bulkheads. In general, the design should be such that the bulkheads are connected to bottom and deck girders by means of large, suitably shaped brackets arranged to give a good stress flow at their junctions with both the girders and the bulkheads.

8.2.4 **Ladder well cofferdams.** Ladder wells of trailing suction dredgers are to be isolated from the remainder of the dredger's structure by local cofferdams at least 600 mm wide, or are to be otherwise protected to prevent serious flooding due to the well side plating being breached by the ladder structure should this be damaged in service. Ladder wells of bucket dredgers are to be isolated by cofferdams, the extent and widths of which are to be sufficient to contain any damage to the well side bulkheads or bottom shell plating that could result from the impact of large objects brought up in the dredge buckets. In way of the buckets the cofferdam may be extended outboard in the form of a local watertight double bottom.

8.3 Spoil space and well boundaries

8.3.1 The minimum plating thickness of spoil space boundaries is to be the thickness required for deep tanks by Ch 1,9.2, or 8,5 mm, whichever is the greater. In the case of grab dredgers the minimum thickness is to be 10 mm. These thickness requirements also apply to the plating of watertight box keels and inner bottom plating. The value of ρ used in the calculations and the height(s) of the overflow weir(s) are to be clearly shown on the midship section plan.

8.3.2 Attention is drawn to the high rate of wear that can occur on spoil space boundaries, and it is recommended that an additional corrosion allowance of 3,0 mm be added on areas subject to particularly onerous conditions. Where such an allowance is added, the fact is to be marked on the relevant plans.

8.3.3 The thickness of plating forming the sides and ends of bucket ladder wells is to be not less than:

$$t = \left(0{,}0055 s\sqrt{T_m} + 3{,}0\right) \text{ mm}$$

In no case, however, is the side plating to have a thickness less than 12 mm nor is the well end plating to have a thickness less than 8,5 mm. Plating forming the boundaries of suction pipe ladder wells is generally to be as required for shell plating. Corrosion allowance on well end plating below bucket ladders may be 2,0 mm.

8.3.4 The thickness of spoil space and ladder well bulkheads may be required to be increased where high shear forces are present.

8.3.5 Bulkheads forming the boundaries of spud wells are to be of increased strength. Each case will be considered on its merits, but in general such bulkheads should have a thickness of not less than 12 mm.

8.3.6 Where non-watertight bulkheads are fitted in the side buoyancy tanks, the thickness of the plating is to be not less than:

(a) t = 6,5 mm, or

(b) t = (5,35 + 0,024L) mm

whichever is the greater. Where the bulkhead is in the form of a wash bulkhead, the openings should be so arranged that, in general, the distance from lightening holes to any slots cut to accommodate side shell or bulkhead longitudinals is at least equal to 1,5 times the depth of the slot. The edges of large openings are to be stiffened.

8.3.7 The Section modulus of framing on spoil space boundaries is to be not less than:

$$Z = \frac{0{,}0113\rho\, s\, h\, l_e^2\, c}{\gamma} \text{ cm}^3$$

where

c has the value given in Table 12.8.1 for longitudinal framing and c = 1,0 for transverse framing

g = 1,4 for rolled or built sections

= 1,6 for flat bars.

The section modulus of longitudinals below $\frac{D}{2}$ is to be taken not less than the value obtained at $\frac{D}{2}$.

Table 12.8.1 Definition of *c*

Symbols	Location	*c*	
		longitudinal framing	
F_B as defined in Pt 3, Ch 4,5.1	$\frac{D}{2}$ and above	1,0	intermediate values by interpolation
	0,2*D* above base (*see* Note)	$\frac{550}{1590 - 1040F_B}$	
	Base line (*see* Note)	$\frac{2060}{3620 - 1560F_B}$	
NOTE For ships with hogging still water bending moments in loaded conditions and for split hull vessels, *c* = 1,0.			

8.3.8 The section modulus of stiffeners bounding wells and deep tanks is to satisfy the requirements of Ch 1,9.2.

8.3.9 For non-watertight bulkheads, the modulus of the stiffeners may be 50 per cent of that required for intact bulkheads. The stiffeners are to be bracketed at top and bottom.

8.3.10 Structure supporting spud well plating and bulkheads below, and in way of, 'A' frames and dredging machinery supports, is to be of substantial construction, account being taken of the dynamic loads likely to occur with the dredging machinery in operation.

8.3.11 Horizontal girders supporting stiffeners on spoil space and ladder well boundaries are, in general, to have scantlings as required by Ch 1,9.2 for deep tanks, with ρ and *h* as defined in 1.5.1 and 8.1.1 respectively and with span, l_e for horizontal girders supporting vertical stiffeners on longitudinal bulkheads, measured between bulkhead bracket and bulkhead bracket, i.e. ignoring any struts which may be fitted between spoil space girder and shell stringer. Alternatively, the section modulus of these horizontal girders may be reduced by 40 per cent from the formula value if struts are fitted on alternate frames between the spoil space girder and a shell stringer. These struts should generally be horizontal and are to have a sectional area as required for pillars by Ch 1,4.4 with ρ as defined in 1.5.1 and *h* measured from the inboard end of the strut to the height defined in 8.1.1. Web frames and girders are to have scantlings as required by Chapter 1, with ρ and *h* as defined in 1.5.1 and 8.1.1 respectively.

8.4 Cross-members

8.4.1 Cross-members are to be fitted within the hopper space in line with the bottom and side shell transverses and with the bulkheads in the side buoyancy spaces. Cross-members need not be fitted at every frame, but their spacing is not to exceed 4,0 m. Where a box keel is fitted on the centreline, webs are to be fitted within the box keel to ensure proper continuity of strength across the ship in way of the hopper cross-member. The webs required within centreline watertight box keels may have a thickness 3,5 mm less than that required for the hopper cross-members with which they are associated, but their minimum thickness is to be not less than 6,5 mm.

8.4.2 The upper edge of the hopper lower cross-members should, in general, be a height of not less than $\frac{D}{4}$ above the above the keel in ships with the number 100 in their character of classification. The lower edge should be as low as practicable after allowing for the proper design of hopper doors, suction passages, etc. Lower cross-members may be fabricated from flat plate suitably stiffened or may take the form of a hollow box, generally of triangular cross-section.

8.4.3 The scantlings of box-type cross-members should be determined from the requirements for hopper bulkheads where applicable. When flat plate lower cross-members are fitted, the thickness of the web is to be not less than:

$t = (0{,}7B + 3)$ mm or 8,5 mm

whichever is the greater.

8.4.4 The cross-sectional area of the cross-member web after deducting access openings, lightening holes, etc., is to be not less than:

$A = 6h_w S_M$ cm^2

where

h_w = height, in metres, of the uppermost hopper overflow weir above the keel

S_M = spacing of the cross-member webs, in metres.

8.4.5 The upper edge of the cross-member is to be stiffened by means of a tube having an outside diameter not less than:

$\delta = 30l_s$ mm

where

l_s = span, in metres, of the upper edge of the cross-member (to the centreline box girder if fitted),

and a thickness equal to the minimum required cross tie web thickness, or by an equivalent flange or structure. The lower edge of the cross-member is also to be suitably stiffened.

8.4.6 The cross-member web is to be fitted with stiffeners, spaced not more than 80*t* mm apart having a modulus of not less than:

$Z = 0{,}04s\, l_e^2$ cm^3

8.4.7 Upper cross-members spanning hopper spaces at or above deck level are to be designed on the basis of actual loads carried, including dynamic factors if applicable, and 60 per cent fixity. Stresses are to be as follows:

Bending stress, σ_b is not to exceed:

74,5 N/mm^2 (7,6 kgf/mm^2)

Shear stress, σ_s is not to exceed:

68,6 N/mm^2 (7,0 kgf/mm^2)

Total stress, $\sigma_c = \sqrt{\sigma_b^2 + 3\sigma_s^2}$ and is not to exceed:

118 N/mm^2 (12 kgf/mm^2)

The members should, in general, be connected to the centreline box keel by one or more pillars, where such a keel is fitted.

8.5 Pillars within hoppers

8.5.1 Pillars are generally to comply with the requirements of Ch 1,4.4, account being taken of the maximum forces that can be applied by rams or other gear fitted for the purpose of activating hopper doors or valves.

8.6 Continuous coamings

8.6.1 Continuous coamings are to have a plate thickness of not less than 8,5 mm. A minimum thickness of 10 mm is recommended for coamings on grab dredgers. Where the depth of the coaming exceeds 80*t*, the plating is to be stiffened by one or more horizontal members so spaced that the width of the upper panel of plating does not exceed 65*t* and the width(s) of the lower panel(s) do(es) not exceed 80*t*.

8.6.2 Where the coaming is stiffened with flat bar members, the members are to have a breadth not less than $0{,}04S_s$ and a thickness not less than 0,05 times their breadth, or 8,5 mm, whichever is the greater. They are to have a minimum inertia of:

$$I = 2S_s^2 A_1 \text{ cm}^4$$

where

A_1 and I include the coaming plating for mid-panel above to mid-panel below the stiffener, and

S_s = spacing of the brackets required by this sub-Section, in metres.

Where stiffeners other than flat bars are used, they are to have at least the same minimum thickness and inertia as required for flat bars.

8.6.3 The upper edge of the coaming is to be stiffened by a fabricated flange, box girder or equivalent structure having a width not less than $0{,}05S_s$ and an inertia not less than:

$$I = 2{,}86S_s^2 A_1 \text{ cm}^4$$

where

A_1 and I include the coaming plating down to mid-panel below

The thickness and/or attachments of the stiffening member are to be such as to minimize any likelihood of local instability under compression loading.

8.6.4 The coamings are to be supported by substantial brackets spaced generally not more than 3,0 m apart where the coamings have a height of more than 600 mm, nor more than 2,5 m where the coamings have a height of more than 1,0 m but on longitudinally framed ships the brackets are to be arranged in way of each deck transverse. Additional brackets may be required in way of the ends of hopper upper cross ties, especially those which themselves support hopper door operating rams or similar equipment.

8.6.5 The ends of continuous coamings are to be well scarfed into the ship's structure at the ends of spoil spaces. Unless longitudinal deckhouse bulkheads are fitted in this area, the coamings are to be extended beyond the end of the spoil space opening for a distance of at least one frame space, or 1,5 times the coaming height, whichever is the greater.

■ *Section 9* Watertight bulkheads

9.1 Arrangements of bulkheads

9.1.1 The number of watertight bulkheads is to be not less than that required for dry cargo ships, *see* Pt 3, Ch 3,4. Their positioning is to be such that one extends the full width of the ship at each end of the spoil spaces, *see also* 8.2. Proposals to dispense with one or more of the watertight bulkheads in that part of the ship in way of spoil spaces may be submitted for consideration. In particular, watertight bulkheads need not be fitted within spoil spaces and an increased spacing of bulkheads in the spaces abreast of spoil spaces will generally be accepted provided that:

(a) Suitable structural compensation is arranged; and

(b) the stability is checked in the damaged condition.

■ *Section 10* Exposed casings

10.1 Scantlings and access

10.1.1 Exposed casings on ships classed **A1 protected waters service** are to have scantlings as required for deckhouses on dry cargo ships classed **100A1**. On ships classed **100A1**, where T_m equals or exceeds the draught corresponding to a Type 'B-60' ship freeboard, direct access is not permitted to the machinery spaces (including dredging pumprooms) from the freeboard deck. Doors may be fitted in exposed casing bulkheads, provided that they lead to a space which is of equivalent strength to the casing and is separated from the machinery space by a second watertight door.

■ *Section 11* Dredging machinery seats and dredging gear

11.1 Dredging machinery seats

11.1.1 The seats supporting the main dredging machinery are to be at least as substantial as those required for the main propulsion machinery for dry cargo ships, *see* Pt 3, Ch 7,6. Continuity between the longitudinal and transverse members of main engine seats and the ship's bottom structure is to be arranged where practicable. Where floors are cut away below dredging pumps, they are to be fitted with face bars, and special care is to be taken to minimize stress-raising details and to ensure good workmanship.

11.2 Dredging gear

11.2.1 Where masts or derrick posts support dredging gear which will be subjected to vibration or other dynamic loads in addition to its true weight, this must be taken into account in the calculations. The dynamic multiplier should be taken between two and three according to the type of machinery and gear used.

■ *Section 12* Ladder wells

12.1 Transverse strength at deck

12.1.1 Where ladder wells are incorporated so that the length of the well exceeds 1,5 times the width of the deck remaining on each side of the well, the portions of the ship on each side of the well are to be adequately cross connected in the region of their free ends, unless the design of the ship renders this impracticable, in which case alternative arrangements are to be made to avoid high stress concentrations at the inboard end of the well.

■ *Section 13* Fenders

13.1 Fenders and reinforcement in way

13.1.1 Dredgers designed to work in conjunction with hopper barges are to be fitted with permanent rubbing strakes or fenders extending down to their lowest normal operating waterline. On transversely framed vessels it is recommended that the side structure in way of the lower edge of the fender be reinforced by a stringer and/or cross ties. It is recommended that, where wooden fenders are fitted to dredgers operating in tropical sea-water, the fenders be cut just above the deepest working waterline and a gap be left sufficient to prevent water soaking up into the fenders.

■ *Section 14* Rudders

14.1 Rudders on bucket dredgers

14.1.1 Where bucket dredgers are arranged with bucket ladders at their stern, the ship's rudders are to be kept well clear of the buckets to minimize the likelihood of damage to the rudders by large objects which may be dredged up. For rudder calculations, *see* Pt 3, Ch 13.

■ *Section 15* Spoil space weirs and overflows

15.1 General

15.1.1 All spoil spaces are to be arranged to allow the safe and efficient overboard discharge of excess water in all weather conditions in which the ship is classed to operate. In ships over 90 m in length and in all ships classed for unrestricted service the spoil space overflows are to be arranged via enclosed overflow trunks so designed as to keep the decks of the ship clear of spoil and water.

15.1.2 In general, bulwarks are not to be fitted in way of open top spoil spaces on dredging and reclamation craft.

15.1.3 Where a ship operates at the maximum draught that could be assigned in accordance with the *International Convention on Load Lines, 1966*, the overflow arrangements fitted should ensure that when the spoil space is loaded, this draught is not exceeded.

15.1.4 Where a hopper dredger having releasing arrangements for cargo dumping, e.g. bottom doors, etc., is permitted by an Administration to be assigned a freeboard less than that which could be assigned by the *International Convention on Load Lines, 1966:*

(a) The structural strength and bending moments are to be acceptable for the deeper draught indicated, and

(b) the dredger is to be operated in a zone of operation and in such weather conditions as are considered appropriate.

15.1.5 Adequate arrangements are to be fitted to prevent overloading under any condition of loading having due regard to trim. The size and position of the overflows are to be confirmed by a loading trial, which is to be carried out when the spoil space is loaded with dredgings of the same density as is likely to be loaded in service.

15.1.6 The cutting of overflow discharge trunk openings in the sheerstrake is to be avoided wherever practicable. In ships over 70 m in length, spoil space overflow discharge trunk openings are not to be cut within 800 mm of the upper edge of the sheerstrake. They are to have corner radii of not less than 150 mm, and suitable compensation is to be arranged. In no case is a discharge trunk to pierce the sheerstrake in way of discontinuities such as breaks of superstructure.

Section 16
Scuppers and sanitary discharges and side scuttles

16.1 General

16.1.1 In all areas where mechanical damage might be likely, all side scuttles, scuppers and discharges, including their valves, controls and indicators, are to be well protected. Consideration is to be given to the likelihood of impact damage to scuttles and discharges due to barges coming alongside, and to scuppers becoming blocked by sand or other spoil which may spill onto the decks or other areas being drained.

16.1.2 Consideration will be given to requests for relaxation of requirements relating to scuttles, scuppers and discharges on ships classed **A1 protected waters service**.

Section 17
Split hopper dredgers and barges

17.1 Symbols and definitions

17.1.1 The symbols used in this Section are defined as follows:

H = height of spoil above base line, in metres

H_s = depth of hopper seal, in metres

L_h = length of hopper well, in metres

M_H = design horizontal bending moment in hopper side wall, in kN m (tonne-f m). A moment giving rise to tensile stress in the side shell is to be taken as positive

P = net pressure per metre ship length resulting from the spoil pressure and the hydrostatic load, *see* Fig. 12.17.2

= $4{,}9\ (p\ (H - H_s)^2 - 1{,}025\ (T - H_s)^2)$ kN/m

$(0{,}5\ (p\ (H - H_s)^2 - 1{,}025\ (T - H_s)^2)$ tonne-f/m)

S_h = span between the centres of hinges, in metres

17.1.2 Other symbols are defined in 1.5.1.

17.2 Hull bending strength

17.2.1 The modulus of the cross-section of the vessel is to be not less than that required by 2.3.1. In addition, the combined stress σ_c, at any point on the cross-section of one half hull, is not to exceed the permissible combined stress σ given in Pt 3, Ch 4,5.5. The combined stress at any point on the cross-section is to be determined from the following expression:

$$\sigma_c = \left(\frac{M_N}{Z_N} + \frac{M_p}{Z_p}\right) \times 10^{-3} \quad \text{N/mm}^2\ (\text{kgf/mm}^2)$$

where

$M_N = \pm M_V \cos\phi \pm M_H \sin\phi$ kN m (tonne-f m)

$M_p = \pm M_H \cos\phi \pm M_V \sin\phi$ kN m (tonne-f m)

$M_V = \pm 0{,}5\ (M_s + M_w)$ kN m (tonne-f m)

where the still water bending moments hogging and sagging are to be combined with the appropriate wave bending moment to give a total moment, M_V, hogging (positive) and sagging (negative)

M_w is defined in 1.5.1.

f_1 = ship service factor, *see* Table 12.2.1

$M_H = 0{,}125P\ L_h\ (2S_h - L_h) \pm M_L$ kN m (tonne-f m)

$M_L = 0{,}286\ f_1\ L^2\ B$ kN m $(0{,}029\ f_1\ L^2\ B$ tonne-f m)

$P = 4{,}9\ (\rho\ (H - H_s)^2 - 1{,}025\ (T - H_s)^2)$ kN m

$(0{,}5\ (\rho\ (H - H_s)^2 - 1{,}025\ (T - H_s)^2)$ tonne-f m)

Account is to be taken of the sign of individual bending moment component in the determination of M_N, M_p, M_V and M_H

I_{NN} = second moment of area of the section of one half hull for all longitudinal continuous material about principal axis NN, in m^4

I_{PP} = second moment of area of the section of one half hull for all longitudinal continuous material about principal axis PP, in m^4

$Z_p = \dfrac{I_{PP}}{y_P}$ in m^3, the modulus of section to a point y_P m, from the principal axis PP

$Z_N = \dfrac{I_{NN}}{y_N}$ in m^3, the modulus of section to a point y_N m, from the principal axis NN

ϕ = angle of rotation of the principal axis NN with respect to the global horizontal axis YY, in degrees.

See also Fig. 12.17.1.

17.2.2 The combined stress for dredging conditions, where draught T_m exceeds T, is not to exceed the permissible combined stress σ_c obtained from 17.2.1.

The combined stress is to be obtained from the expression for σ_c given in 17.2.1, substituting the following expression of M_V:

$M_V = \pm 0{,}5\ (M_{sm} + M_{wd})$ kN m (tonne-f m)

where

M_{wd} = $0{,}56 f_2\ M_{wo}$ and M_{wo} is determined from Pt 3, Ch 4,5.2, using C_{bm} in place of C_b and f_2 is given in Pt 3, Ch 4,5.2.

17.3 Separation arrangements

17.3.1 Hinges, actuating and locking devices provided to facilitate separation of the split hulls to discharge spoil are to be of efficient design and of adequate strength and scantlings to ensure safe discharge operations. Hydraulic rams or other actuating devices are to have sufficient power to ensure controlled opening operations and to achieve closing of the hulls in all anticipated weather conditions.

17.3.2 Locking devices are to be of a suitable design and strength to ensure that accidental separation of the hulls cannot occur due to ship motions and vibrations.

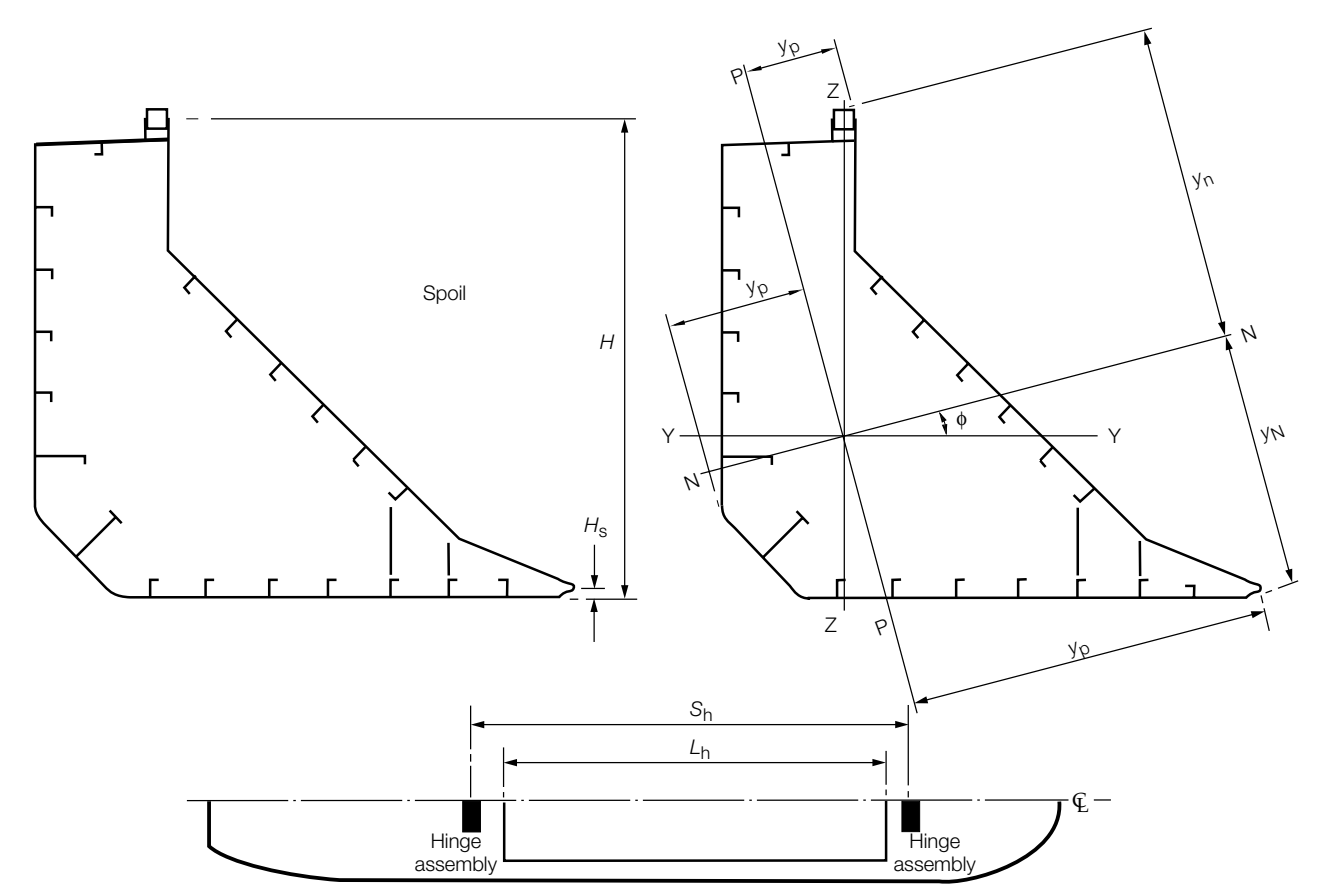

Fig. 12.17.1 Split hulled vessels

17.3.3 Hinge pin gudgeons are to be efficiently connected to the hull structure by means of brackets or equivalent and effectively integrated with local structure which is to be suitably reinforced. Suitable reinforcement is to be fitted to local hull structure in way of anchorages for rams and locking devices to ensure efficient transmission of loading from these devices into the hull.

17.3.4 The forces acting on hinges, actuating mechanisms and locking devices are to be determined by direct calculations based on the maximum combination of loading which can be expected in any service condition. In general, this will require the resolution of the static and dynamic systems of force acting on the hulls taking due account of the relative locations of hinges, actuating mechanisms and locking devices. Fig. 12.17.2 illustrates a typical arrangement of hinges and mechanisms together with associated static loads. In general, one half of the load acting on one half hull may be assumed to act on the forward hinge assembly and one half on the after hinge assembly.

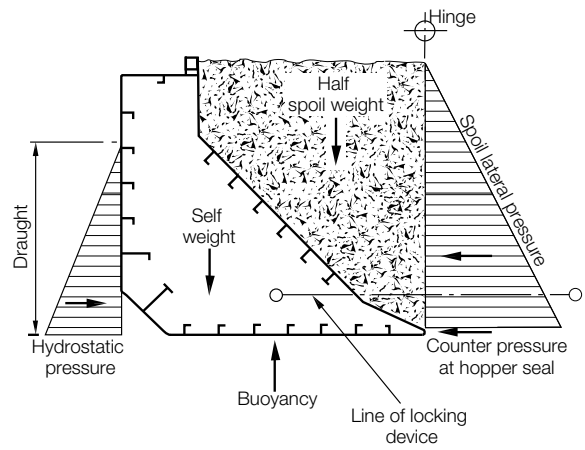

Fig. 12.17.2 Split hopper dredger

17.4 Hinge pins

17.4.1 The diameter of the hinge pins is to be determined using the maximum resultant shear force acting on the pin cross section in conjunction with an average shear stress not exceeding $\frac{62}{k}$ N/mm^2 $\left(\frac{6,3}{k}\right.$ kgf/mm^2$\left.\right)$.

In no case is the diameter of the hinge pin to be less than that calculated from the following expression:

$$D_p = 20\sqrt{\frac{L^{0,5}\,B\,D\,K}{n}} \text{ mm}$$

where

k = higher tensile steel factor, *see* Pt 3, Ch 2,1

n = the number of pin cross sections resisting shear forces

and L, B and D are defined in 1.5.1.

17.4.2 Where arrangements are such that hinge pins are subjected to significant bending, the diameter of the pins will be specially considered.

■ *Section 18*
Direct calculations

18.1 Application

18.1.1 Direct calculations may be used to assess the scantlings of primary structure in spoil spaces and adjacent structure.

18.1.2 Direct calculations may be required to be submitted in respect of unusual structural arrangements.

18.2 Procedures

18.2.1 Methods applied for direct calculations of scantlings will be given individual consideration dependent on the particular structural configuration, *see also* Pt 3, Ch 1,3.1.

© Lloyd's Register, 2007
Published by Lloyd's Register
Registered office
71 Fenchurch Street, London, EC3M 4BS
United Kingdom

Printed by Butler and Tanner,
Frome, Somerset